INDEX

INDEX

	INTRODUCTION	4
	LIST OF ABBREVIATION	6
	CONVERSION FACTORS	7
	CERTIFICATES	8
	TESTING	10
	LOCKING DEVICES	11

SHACKLES

H9	HIGH ALLOY SHACKLE	18
H10	BOW SAFETY PIN SHACKLE	20
H10 SUPER	BOW SAFETY PIN SHACKLE (SUPER)	22
D15	DEE SAFETY PIN SHACKLE	23
H11	HEAVY DUTY DOUBLE NUT SHACKLE	24
H12	DOUBLE PIN / SNOTTER SHACKLE	25
H14	WIDE BODY SHACKLE	26
D10	CROWN PIN SHACKLE	28
D14	END JOINING SHACKLE WITH ROUND PIN	29
D16	JOINING SHACKLE WITH PEAR SHAPE PIN	30
D17	ANCHOR SHACKLE WITH OVAL PIN	31
SLIM	SLIMLINE PRODUCTS	32
ROV	ROV PRODUCTS	33

THIMBLES

K2	HEAVY DUTY STUB-END THIMBLE	38
K2-B	HEAVY DUTY STUB-END THIMBLE REINFORCED	40
K2-C	HIGH STRENGTH THIMBLE	41
K3	FIBRE ROPE THIMBLE	42
K3-B	FIBRE ROPE THIMBLE REINFORCED	43
K4	EGG SHAPED THIMBLE / ROUND THIMBLE	44
K4	CONTAINER THIMBLE EGG SHAPED & ROUND	45
K5	SOLID THIMBLE	46
K10	THIMBLE WITH LINK	47
K11	TUBULAR THIMBLE	49
K12	TUBULAR THIMBLE WITH LINK	50
K13	BELLMOUTH THIMBLE	52
K14	CAST THIMBLE	53
K17	FORGED ROULETTE THIMBLE	54
K18	DIABOLIC SPOOL	55

SOCKETS

SO1	CLOSED SPELTER SOCKET	60
SO2	OPEN SPELTER SOCKET	62
SO3	OPEN WEDGE SOCKET	64
SO4	CR SOCKET	65
SO5	PMS / LTM FORGED SOCKET	66
SO6	CR-D SOCKET	67
SO12	STOPPER SOCKET	69

LINKS

SC1	MASTER LINK	74
SC2	CONNECTING LINK FOR PENNANT LINES	76
SC3	CR CONNECTOR	77
SC4	PEAR CONNECTING LINK	78
SC5	MASTER LINK ASSEMBLY	79
SC7	CHAIN ADAPTER WITH SPECIAL END LINK	80
SC10	INSTALLATION LINK	81
SC11	OFFSHORE MASTER LINK	83

SWIVELS

SW1	CLOSED BODY SWIVEL	88
SW2	CR CHAIN SWIVEL	90
SW3	CR ROPE SWIVEL	91
SW4	CR-D CHAIN SWIVEL	92
SW5	CR-D ROPE SWIVEL	93
SW6	CR-X MOORING SWIVEL	94
SW7	DEEPWATER HEAVY DUTY SWIVEL	96

HOOKS

HK2	EYE HOOK (ROV)	104
HK3	HEAVY DUTY PELICAN SLIPHOOK	106
HK4	SLIPHOOK	107
HK5	ROV SHANK HOOK	108
HK6	ANCHOR LINE HOOK	110
HK12	KS HOOK	111
HK14	SOFTSLING FRIENDLY ROV HOOK	112
HK15	SOFTSLING FRIENDLY ROV TRANSFER HOOK	114
HK17	SOFTSLING FRIENDLY ROV CLEVIS HOOK	115

MOORING

D15	DEE SAFETY PIN SHACKLE	122
D14	END JOINING SHACKLE WITH ROUND PIN	123
D16	JOINING SHACKLE WITH PEAR SHAPE PIN	124
D17	ANCHOR SHACKLE WITH OVAL PIN	125
H15	PLATE CONNECTOR / THIMBLE SHACKLE	126
D18	D-SHACKLE WITH ROULETTE THIMBLE	127
K17	FORGED ROULETTE THIMBLE	128
SO5	PMS / LTM FORGED SOCKET	129
SC3	CR CONNECTOR	130
SC4	PEAR CONNECTING LINK	131
SC7	CHAIN ADAPTER WITH SPECIAL END LINK	132
SC8	FORGED H-LINK	133
SC9	FORGED Y-LINK	134
SC10	INSTALLATION LINK	135
SW5	CR-D ROPE SWIVEL	136
SW6	CR-X MOORING SWIVEL	137
HK12	KS HOOK	138
TR2	MOORING TRIANGLE & QUAD PLATE	139

OTHERS

BL1	VERTICAL LEAD SHEAVE	142
BL4	HORIZONTAL LEAD SHEAVE	142
BL2	SNATCH BLOCK WITH SAFETY WINDOW	143
BL3	SNATCH BLOCK FOR SHACKLE LIFTING	144
T2	HEAVY DUTY TURNBUCKLE	146
TF1	TUNING FORK	148
TR1	TRIANGLE PLATE	149
WC1	WIRE ROPE CLIP	150

GN
GROFSMEDERIJ NIEUWKOOP BV
GN ROPE FITTINGS
GN WLL 2000T
GN WLL 2000T
GN WLL 2000T
GN WLL 2000T
GN WLL 2000T

INTRODUCTION

GN Rope Fittings was founded in **1923** by the Bon brothers under the name Smederij N.G. Bon. In **1938**, the company was taken over by the Bodegraven brothers and renamed N.V. Nieuwkoopse Stoomsmederij.

In **1960**, this company expanded by merging with Grofsmederij Uithoorn BV and its new owners, the Vossenberg family - who were related to the Bodegraven family. Both companies supplied equipment to the shipping, fishing and offshore industries. After some time, the two companies merged to form Grofsmederij Nieuwkoop BV located in Nieuwkoop.

Today, Grofsmederij Nieuwkoop B.V., known internationally as GN Rope Fittings, is one of the leading manufacturers of mooring and heavy lifting accessories in the offshore industry and is still owned by the Vossenberg family.

GN Rope Fittings
Grofsmederij Nieuwkoop BV
Transportweg 47
2421 LT Nieuwkoop
The Netherlands

Tel.: +31 172 579 303
E-mail: sales@gnweb.com
Internet: www.gnweb.com

Bankers: ABN-AMRO bank N.V.
Account number: 4692.25.696
Swift code: ABNANL2A
IBAN: NL51ABNA0469225696

VAT number: NL0010.56.839.B01
Chamber of commerce: Leiden reg.no. 28003642

LIST OF ABBREVIATION

In this catalogue, the following abbreviations have been used:

ABNT	Associação Brasileira de Normas Técnicas
ABS	American Bureau of Shipping
BV	Bureau Veritas
C	Celsius
cc	cubic centimeter
CR	Chain-Rope
CR-D	Chain-Rope Detachable
DIN	Deutsches Institut für Normung
DNV-GL	Det Norske Veritas - Germanischer Lloyd
EN	European Standard
F	Fahrenheit
FEA	Finite Element Analysis
GN	Grofsmederij Nieuwkoop
HMPE	High-Modulus Polyethylene
ISO	International Organization of Standardization
kg	kilogram
kN	kilonewton
lbs	pounds
LTM	Long Term Mooring
MBL	Minimum Break Load
MPI	Magnetic Particle Inspection
mm	millimeter
NDT	Non-destructive testing
NEN	Nederlandse Norm
NRS	Non-rotating stopper
OHSAS	Occupational Health and Safety Assessment Specification
PL	Proof Load
PMS	Permanent Mooring System
ROV	Remotely Operated Vehicle
SWL	Safe Working Load
US	Ultrasonic Inspection
WLL	Working Load Limit

Product codes

H	Shackle
D	Shackle
K	Thimble
SO	Socket
SC	Link
SW	Swivel
HK	Hook
BL	Block
T	Turnbuckle
TF	Tuning fork
TR	Triangle plate
WC	Wire rope clip

CONVERSION FACTORS

To convert from:	To:	Multiply by:
Length		
mm	inch	0.03937
inch	mm	25.4
m	foot (12 inch)	3.28084
foot (12 inch)	m	0.3048
Volume		
cc (cm^3)	ci (in^3)	0.06102
ci (in^3)	cc (cm^3)	16.38706
Mass		
metric tons	pounds	2204.62262
pounds	metric tons	0.00045
pounds	kilogram	0.45359
kilogram	pounds	2.20462
US tons (short tons)	metric tons	0.90718
metric tons	US tons (short tons)	1.10231
metric tons	kilogram	1000
kilogram	metric tons	0.001
metric tons	kilo Newton	9.80665
kilo Newton	metric tons	0.10197
kips	kilo Newton	4.44822
kilo Newton	kips	0.22481
Torque		
Newton meter	foot pound-force	0.73756
foot pound-force	Newton meter	1.35582
Temperature		
Celsius (Tc)	Fahrenheit (Tf)	(Tc * 1.8) + 32
Fahrenheit (Tf)	Celsius (Tc)	(Tf - 32) * 0.55556

Certificates Inspection and documents
GN products are available with several types of applicable certifications.
GN is approved manufacturer for different type of products by several classification societies.
For (special) products we can arrange for third-party design approvals.

On request we can deliver our products with the following certificates and inspections:
- Certificate of conformity.
- Certificate of Origin.
- Material certificate in accordance with EN 10204 - 3.1 or 3.2
- Load test certificate.
- NDT inspection, Magnetic Particle Inspection (M.P.I.) and Ultrasonic Inspection (U.S.)
- Classification society inspection certificate.
- Design approval certificate.
- FEA strength and Fatigue calculations.

M.P.I.

Examination standard	EN10228-1:2012
Acceptance standard	DNV-OS-E302

U.S.

Examination standard	EN10228-3:2012
Acceptance standard	EN10228-3:2012

You will find the cost of the certificates in our latest price list or you can ask our sales team for the applicable certification each product type.

CERTIFICATES

ABS
Manufacturer approval

ABS
Quality assurance program

BV
Manufacturer approval

DNV-GL
2.7-1

DNV-GL
2.7-3

DNV-GL
ISO9001:2008

DNV-GL
ISO14001:2004

DNV-GL
Manufacturer approval

DNV-GL
OHSAS18001:2007

DNV-GL
OS E302

DNV-GL
OS E304

Lloyd's
Approved testhouse

Lloyd's
Manufacturer approval

TESTING

Our products can be proof load tested, break load tested and fatigue cycled tested on our own, in-house developed 1250, 3000 and 6000 tonne test rig. These can be subjected to NDT tests by our level 2 certified staff.

Calculation of test load according as follows:

Lifting shackles		
≤ 85 ton		PL = (2,0 x WLL) ton
> 85 ton		PL = (1,22 x WLL + 20) ton
Shackles type D14, D16 and D17		PL = according to the offshore mooring chain guide MBL = according to the offshore mooring chain guide
Sockets		PL = (2,0 x WLL) ton
Links type SC1, SC5 and SC11	≤ 85 ton	PL = (2,0 x WLL) ton
	> 85 ton	PL = (1,5 x WLL) ton
Link type SC2		PL = (2,0 x WLL) ton
Links type SC3, SC4 and SC6 up to SC10		PL = according to the offshore mooring chain guide
Hooks, swivels, turnbuckles, tuningforks and triangle plates		
≤ 25 ton		PL = (2,0 x WLL) ton
> 25 ton		PL = (1,22 x WLL + 20) ton

Fatigue calculation of test load according as follows:

For lifting component	1,5 x WLL x 20000
For mooring component	(various load) x (quantity of cycles)

LOCKING DEVICES

Standard

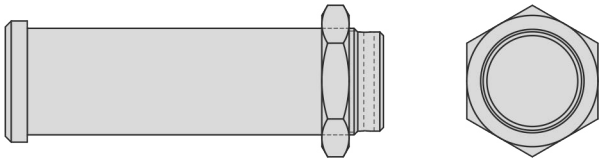

Double nut

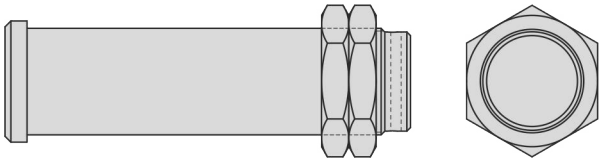

Domed nut

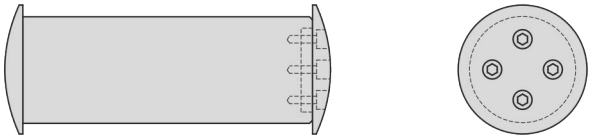

Non-rotating stopper

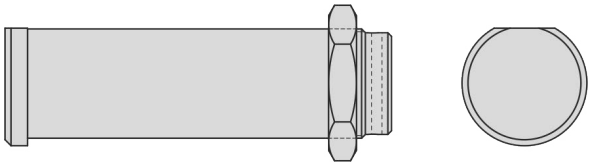

Caps

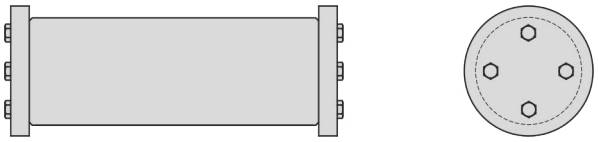

Locking bolt + nut

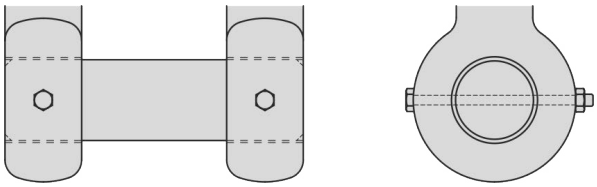

Horse shoe

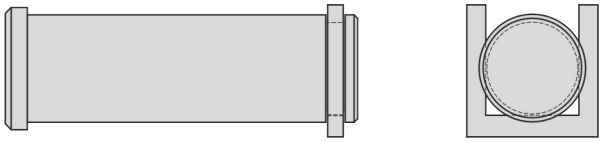

Washers

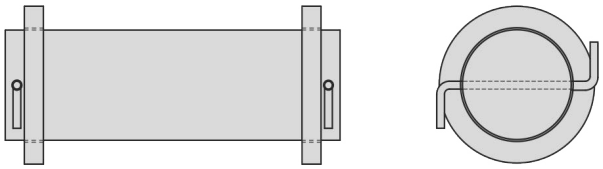

Round nut

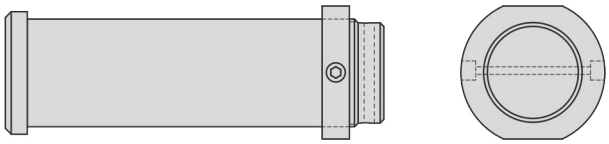

ROV

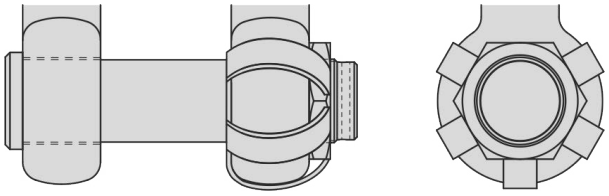

Cotterpin through the nut

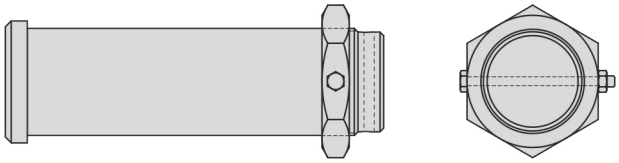

Cotterpin through the bolt

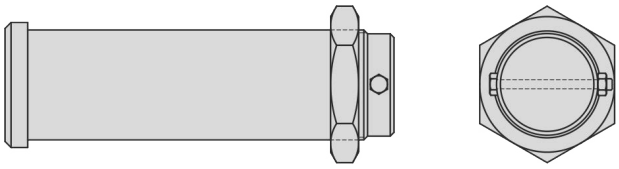

Splitpin

Z-bar

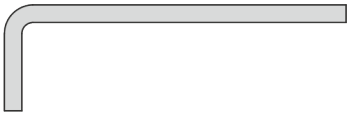

Cotterpin + nut

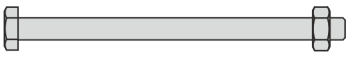

NOTES

H9
High alloy shackle

H10
Bow safety pin shackle

H10 super
Bow safety pin shackle super

D15
Dee safety pin shackle

H11
Heavy duty double nut shackle

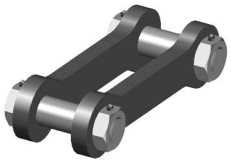

H12
Double pin / snotter shackle

H14
Wide body shackle

D10
Crown pin shackle

D14
End joining shackle with round pin

D16
Joining shackle with pear shape pin

D17
Anchor shackle with oval pin

SLIM
Slimline products

ROV
ROV products

GN WLL 2500T

NK 50

Application information

Shackles are used in lifting and static systems as removable links to connect (steel) wire rope, chain and other fittings.

Chain or Dee shackles (H9, D15, H11 and D10 shackles) are mainly used on one-leg systems.
Anchor, Bow or Wide body shackles (H9, H10 and H14 shackles) are used on one leg and multi-leg systems.
End-Joining, Joining and Anchor shackles (D14, D16 and D17 shackles) are used in mooring or anchor lines.

Instructions for use

For screw pins ensure that the pin is correctly screwed into the shackle eye, i.e. tighten hand-tight, then secure using a wrench or other suitable tool so that the collar of the pin is fully seated on the shackle eye. Incorrect seating of the pin may be due to a bent pin, too tight fitting thread or misalignment of the pin holes. Do not use the shackle under these circumstances. Never replace a shackle pin except with one of the same size, type and make as it may not be suitable for the loads imposed.
Select the correct type of shackle and its Working Load Limit for the particular application. Should extreme circumstances or shock loading be applicable, this must be well taken into account on selecting the correct shackle. Make sure that the shackle is supporting the load correctly, i.e. along the axis of the shackle body centre line, avoid introduction of bending loads, unstable loads and do not apply overloads. To avoid eccentric loading of the shackle a loose spacer may be used on either end of the shackle pin.

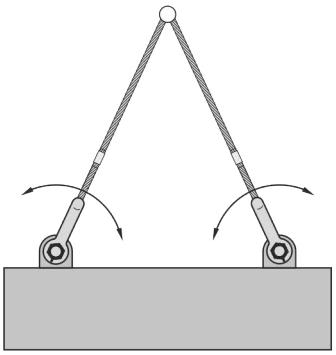

Right

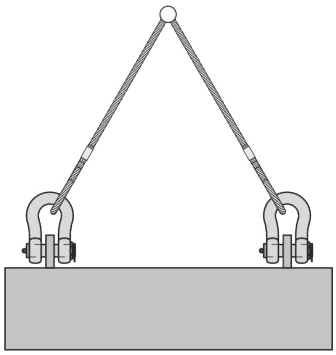

Wrong

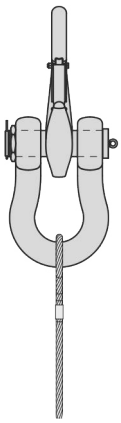

Right

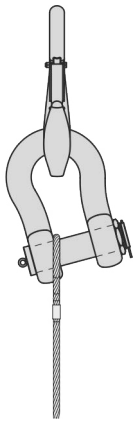

Wrong

Avoid applications where due to movement (e.g. of the load or the rope) the shackle pin can rotate and possibly be unscrewed. If such an application is necessary or when the shackle is to be left in place for a prolonged period or where maximum pin security is required, use a shackle with a safety bolt, nut and pin cotter pin.

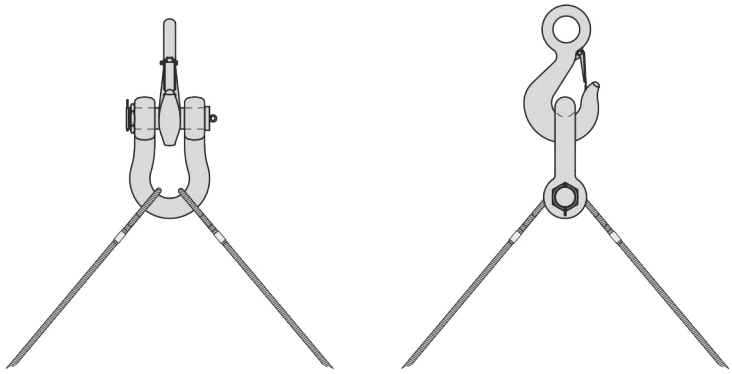

Right Wrong

Loads

Point loads: Most of the time the load bearing component that is in connection with a shackle is of a rounded shape. Point loading of shackles is allowed but the minimum diameter of a rounded component should be equal or bigger than the bow size of the shackle being used. Bigger diameters and/or flat parts (at shackle pin side) to increase contact area can be beneficial. Sharp edges should be avoided.

Side loads: Side loads should be avoided as well, as the products are not designed for this purpose. If side loads cannot be avoided, the reduction factors from below table must be taken into account: In-line loading is considered to be a load perpendicular to the pin and in the plane of the bow. Load angles in the table are the deviating angles from the in line loads.

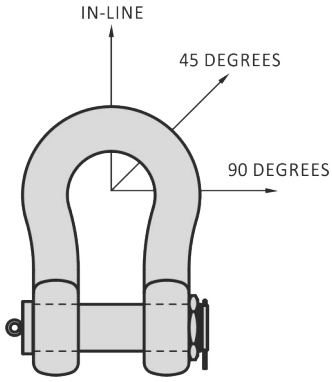

Angle of Side Load from vertical in-line of shackle	Reduction for side loading New Working Load Limit
0° In-Line	100% of Rated Working Load Limit
45° from In-Line	70% of Rated Working Load Limit
90° from In-Line	50% of Rated Working Load Limit

When using shackles in connection with multi-leg slings, due consideration should be given to the effect of the angle between the legs of the sling. As the angle increases, so does the load in the sling leg and consequently in any shackle attached to that leg. When a shackle is used to connect two slings to the hook of a lifting device, a bow type shackle must be assembled with the slings in the shackle body and the hook engaged with the shackle pin. The angle between the slings should not exceed 120°. If symmetrically loaded the shackle may be used to the full WLL.

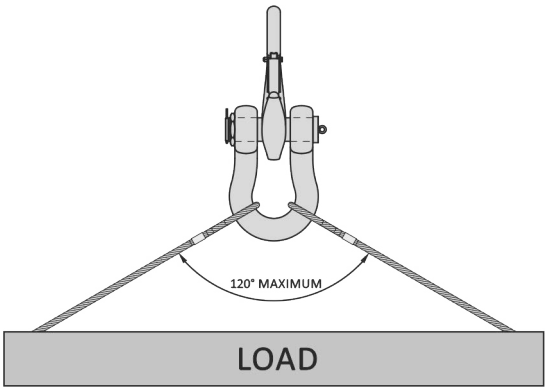

Shackle-to-shackle connection

GN shackles can also be used according to below configurations. The maximum load of the configuration is limited by the component with the lowest WLL.

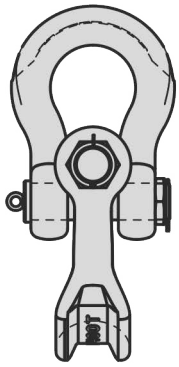

Pin - Pin

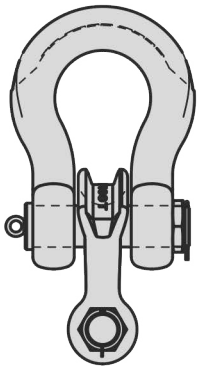

Bow - Pin

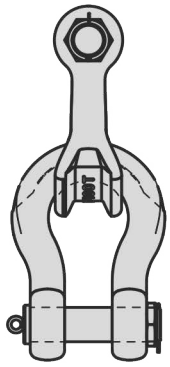

Bow - Bow

Temperatures

If extreme temperature situations are applicable, the following load reduction must be taken into account:

Temperature	Reduction for elevated temperatures New Working Load Limit
up to 200°C	100% of Rated Working Load Limit
200°C - 300°C	70% of Rated Working Load Limit
300°C - 400°C	50% of Rated Working Load Limit
> 400°C	not allowed

On request we can inform you about low temperature impact values, -20, -40 and -50 degrees Celsius.

Inspection

Inspection should take place at least every six months and even more frequently when the shackles are used in severe operating conditions.
Shackles should be inspected before use to ensure that:

- All markings are legible
- The body and pin are both identifiable as being of the same size, type and make
- The threads of the pin and the body are undamaged
- Never use a safety bolt type shackle without using a securing pin
- The body and the pin are not distorted or unduly worn
- The body and pin are free from nicks, gouges, cracks and corrosion
- Shackles may not be heat treated as this may affect their Working Load Limit
- Never modify, repair or reshape a shackle by machining, heating or bending as this will affect the Working Load Limit
- Welding on shackles body and pins is not allowed, with exception of the crown pin shackles D10

Markings

As minimum the following markings must be hard stamped in the shackle:

- Applicable Working load or Proof load
- Brand mark
- Production number

HIGH ALLOY SHACKLE

TYPE H9

Material : Forged high tensile steel quenched and tempered
Safety factor : 6 times
Standards : Generally according to US Federal Spec RR-C-271
Finish : Galvanized
Temperature range : -4°F up to +392°F
Standard certification : Certificate of Conformity
3.1 material certificate EN 10204

TYPE APPROVED PRODUCT
DNV·GL
2.7-1

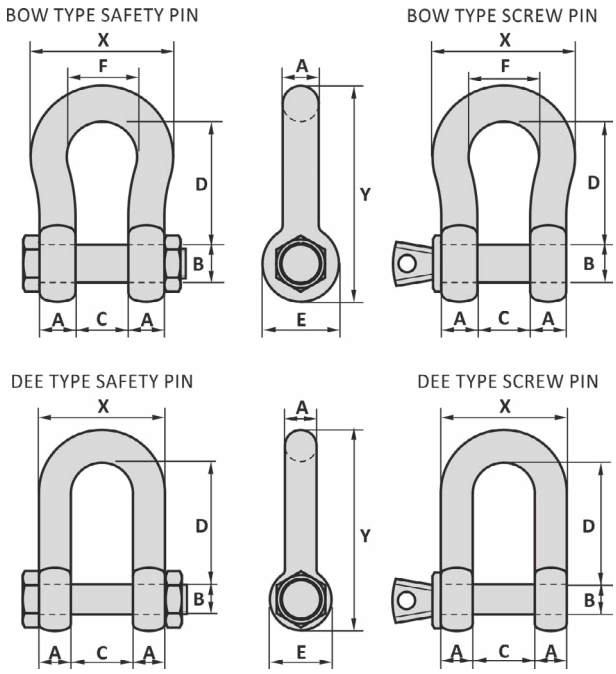

WLL ton	Art. No. Dee screw pin	Art. No. Dee safety pin	Art. No. Bow screw pin	Art. No. Bow safety pin	A inch	B inch	C inch	D Dee inch	D Bow inch	E inch	F inch	X Dee inch	X Bow inch	Y Dee inch	Y Bow inch	Packing pcs	Weight lbs
0.33	32000003		37000004		3/16	1/4	3/8	3/4	7/8	15/32	5/8	25/32	1 1/32	1 5/16	1 13/32	25	0.04
0.5	32000005		37000006	37000009	9/32	5/16	15/32	7/8	1 1/8	11/16	25/32	1 1/32	1 11/32	1 21/32	1 15/16	25	0.13
0.75	32000007		37000007	37000008	11/32	3/8	9/16	1 1/32	1 1/4	25/32	7/8	1 1/4	1 9/16	1 31/32	2 3/16	25	0.24
1	32000010		37000011	37000017	3/8	7/16	1/16	1 1/4	1 7/16	29/32	1 1/32	1 7/16	1 13/16	2 5/16	2 1/2	25	0.35
1.5	32000015		37000015	37000016	7/16	1/2	3/4	1 7/16	1 11/16	1 1/16	1 1/8	1 5/8	2	2 11/16	2 29/32	25	0.49
2	32000021	32000025	37000020	37000029	9/16	5/8	7/8	1 11/16	2	1 11/32	1 1/4	1 31/32	2 9/32	3 3/16	3 1/2	25	0.93
3.25	32000030	32000039	37000030	37000039	5/8	3/4	1 1/16	2	2 1/2	1 9/16	1 11/16	2 5/16	2 15/16	3 13/16	4 5/16	20	1.6
4.75	32000040	32000049	37000040	37000049	3/4	7/8	1 7/32	2 5/16	3	1 13/16	2	2 23/32	3 1/2	4 13/32	5 1/16	10	2.6
6.5	32000060	32000069	37000060	37000069	7/8	1	1 13/32	2 7/8	3 1/4	2 1/16	2 9/32	3 5/32	4	5 9/32	5 11/16	5	4.0
8.5	32000080	32000089	37000080	37000089	1	1 3/32	1 11/16	3 11/32	3 3/4	2 5/16	2 11/16	3 21/32	4 21/32	6 1/16	6 7/16	5	5.7
9.5	32000090	32000099	37000090	37000099	1 3/32	1 1/4	1 27/32	3 9/16	4 1/4	2 19/32	2 15/16	4 1/16	5 5/32	6 9/16	7 9/32	4	8.2
12	32000120	32000129	37000120	37000129	1 1/4	1 3/8	2	3 11/16	4 17/32	2 27/32	3 1/4	4 17/32	5 25/32	7 3/32	7 29/32	3	11
13.5	32000130	32000139	37000130	37000139	1 3/8	1 1/2	2 1/4	4 17/32	5 1/4	3 5/32	3 5/8	5	6 3/8	8 7/32	8 15/16		14
17	32000170	32000179	37000170	37000179	1 1/2	1 21/32	2 3/8	5	5 3/4	3 15/32	3 29/32	5 11/32	6 7/8	9 1/16	9 13/16		18
25	32000250	32000259	37000250	37000259	1 25/32	1 31/32	2 29/32	5 7/8	7	4 1/16	4 31/32	6 7/16	8 1/2	10 11/16	11 13/16		31
35	32000350	32000359	37000350	37000359	1 31/32	2 1/4	3 1/4	6 3/4	7 3/4	4 3/8	5 7/16	7 3/16	9 3/8	12	13 1/32		44
42.5	32000420	32000429	37000420	37000429	2 1/4	2 9/16	3 3/4	7 15/32	8 3/4	5 1/8	6 5/16	8 7/32	10 25/32	13 19/32	14 27/32		62
55	32000550	32000559	37000550	37000559	2 9/16	2 3/4	4 1/8	8	10 1/4	5 23/32	7 3/32	9 1/4	12 3/16	14 13/16	17 1/16		88
85		32000859		37000859	2 15/16	3 1/4	5	9	12 15/16	6 3/8	7 15/32	10 29/32	13 3/8	16 13/16	20 3/4		137

Tolerance: Inside length ± 7.5%, all other forged parts ± 5%, machined parts ± 1/32 inch

04-02-2016

HIGH ALLOY SHACKLE TYPE H9

Material : Forged high tensile steel quenched and tempered
Safety factor : 6 times
Standards : Generally according to US Federal Spec RR-C-271
Finish : Galvanized
Temperature range : -20°C up to +200°C
Standard certification : Certificate of Conformity
3.1 material certificate EN 10204

TYPE APPROVED PRODUCT
DNV·GL
2.7-1

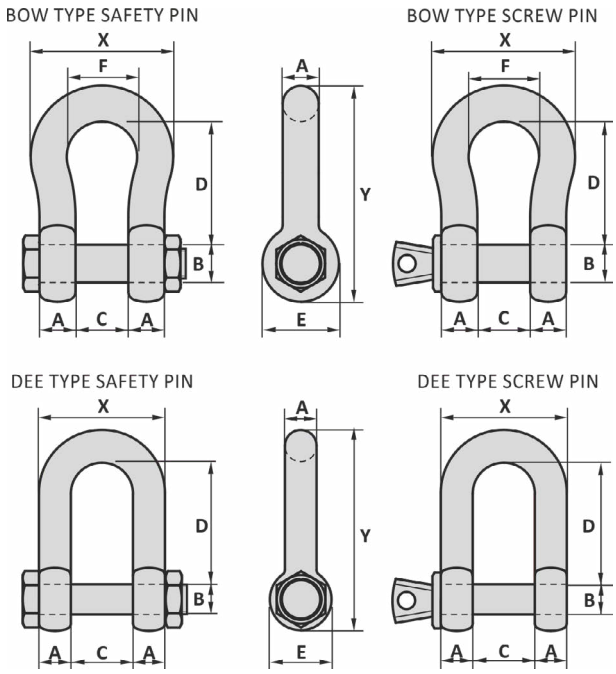

WLL ton	Art. No. Dee screw pin	Art. No. Dee safety pin	Art. No. Bow screw pin	Art. No. Bow safety pin	A mm	B mm	C mm	D Dee mm	D Bow mm	E mm	F mm	X Dee mm	X Bow mm	Y Dee mm	Y Bow mm	Packing pcs	Weight kg
0.33	32000003		37000004		5	6	10	19	22	12	16	20	26	33	36	25	0.02
0.5	32000005		37000006	37000009	7	8	12	22	29	17	20	26	34	42	49	25	0.06
0.75	32000007		37000007	37000008	9	10	14	26	32	20	22	32	40	50	56	25	0.11
1	32000010		37000011	37000017	10	11	17	32	37	23	26	37	46	59	64	25	0.16
1.5	32000015		37000015	37000016	11	13	19	37	43	27	29	41	51	68	74	25	0.22
2	32000021	32000025	37000020	37000029	14	16	22	43	51	34	32	50	58	81	89	25	0.42
3.25	32000030	32000039	37000030	37000039	16	19	27	51	64	40	43	59	75	97	110	20	0.74
4.75	32000040	32000049	37000040	37000049	19	22	31	59	76	46	51	69	89	112	129	10	1.2
6.5	32000060	32000069	37000060	37000069	22	25	36	73	83	52	58	80	102	134	144	5	1.8
8.5	32000080	32000089	37000080	37000089	25	28	43	85	95	59	68	93	118	154	164	5	2.6
9.5	32000090	32000099	37000090	37000099	28	32	47	90	108	66	75	103	131	167	185	4	3.7
12	32000120	32000129	37000120	37000129	32	35	51	94	115	72	83	115	147	180	201	3	4.9
13.5	32000130	32000139	37000130	37000139	35	38	57	115	133	80	92	127	162	209	227		6.5
17	32000170	32000179	37000170	37000179	38	42	60	127	146	88	99	136	175	230	249		8.2
25	32000250	32000259	37000250	37000259	45	50	74	149	178	103	126	164	216	271	300		14
35	32000350	32000359	37000350	37000359	50	57	83	171	197	111	138	183	238	305	331		20
42.5	32000420	32000429	37000420	37000429	57	65	95	190	222	130	160	209	274	345	377		28
55	32000550	32000559	37000550	37000559	65	70	105	203	260	145	180	235	310	376	433		40
85		32000859		37000859	75	83	127	229	329	162	190	277	340	427	527		62

Tolerance: Inside length ± 7.5%, all other forged parts ± 5%, machined parts ± 1 mm

04-02-2016

BOW SAFETY PIN SHACKLE TYPE H10

Material	:	Alloy steel
Safety factor	:	5 times
Standards	:	Generally according to US Federal Spec RR-C-271
Finish	:	Painted
Temperature range	:	-40°F up to +392°F, Polar Rated
Standard certification	:	Certificate of Conformity 3.1 material certificate EN 10204

Non-standard sizes or custom products available on request

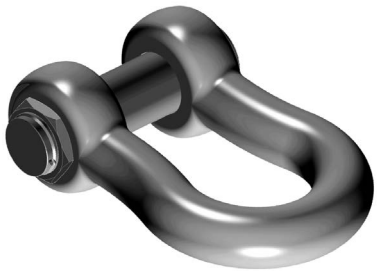

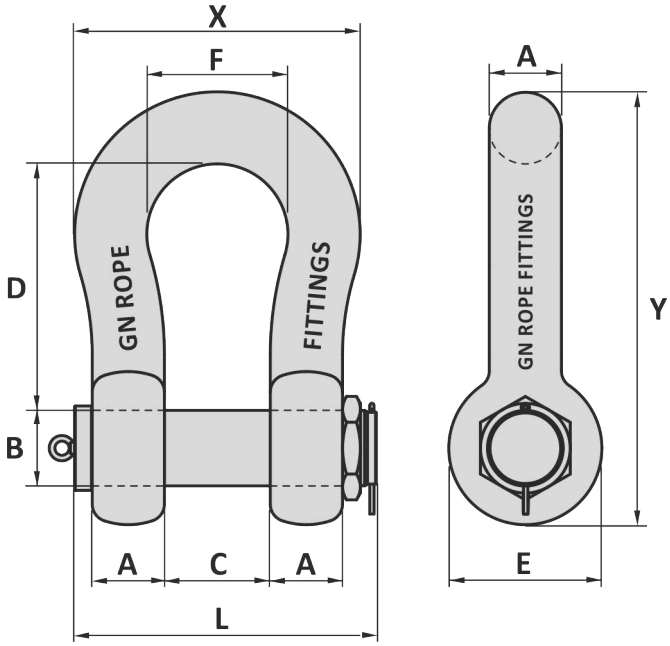

* Shackles from WLL 1250 ton completed with eyebolts on both sides

Art. No.	WLL ton	A inch	B inch	C inch	D inch	E inch	F inch	L inch	X inch	Y inch	Weight lbs
37001209	120	3 ½	3 ¾	5 29/32	14 31/32	7 ⅞	9 ⅜	16 17/32	16 ⅜	24 9/32	243
37001509	150	4	4 ¼	6 11/16	15 ¾	9 1/16	10 13/16	18 11/16	18 ⅞	26 13/32	353
37002009	200	4 23/32	4 15/16	7 3/32	19 11/16	10 ¼	11 13/32	20 15/32	20 ⅞	32	518
37002509	250	4 15/16	5 ½	8 1/16	21 ¼	10 ¼	12	22 1/16	21 27/32	34 1/16	628
37003009	300	5 ⅛	5 23/32	8 1/16	23 ⅝	12	12	22 7/16	22 ¼	37 23/32	750
37004009	400	6 ½	6 ⅞	9 1/16	26 25/32	13 25/32	12 13/16	26 3/16	25 25/32	43 ⅝	1235
37005009	500	7 3/32	7 9/32	10 1/32	27 9/16	14 9/16	13 25/32	28 11/32	27 15/16	45 19/32	1510
37006009	600	7 11/16	8 1/16	11 7/32	27 9/16	15 15/16	14 ¾	32 3/32	30 ⅛	47 ¼	1940
37007009	700	8 1/16	8 9/16	12 3/16	27 9/16	17 ⅛	15 ¾	33 ⅞	31 ⅞	48 15/32	2161
37008009	800	8 ¼	8 9/16	12 3/16	27 9/16	17 ⅛	15 ¾	34 ¼	32 9/32	48 21/32	2425
37009009	900	8 21/32	9 1/16	13	27 9/16	18 5/16	16 17/32	35 13/16	33 ⅞	49 15/16	2822
37010009	1000	9 1/16	9 7/16	13 25/32	29 17/32	18 29/32	16 17/32	37 13/32	34 21/32	50 25/32	3219
37012509	1250	10 15/16	10 ⅝	14 9/16	30 23/32	23 7/32	17 23/32	43 ½	39 ¾	58 21/32	5115
37015009	1500	11 1/32	11 13/32	14 9/16	31 ½	24	17 23/32	43 ½	39 ¾	60 ¼	5401
37017509	1750	11 13/16	13	16 15/16	37 13/32	26	21 ¼	48 7/16	44 ⅞	68 11/16	7231
37020009	2000	12 19/32	14 3/16	18 ⅛	41 11/32	26 25/32	22 1/16	51 3/16	47 ¼	74 13/32	8642

Tolerance: Inside length ± 7.5%, all other forged parts ± 5%, machined parts ± 1/32 inch

01-08-2016

BOW SAFETY PIN SHACKLE TYPE H10

Material	:	Alloy steel
Safety factor	:	5 times
Standards	:	Generally according to US Federal Spec RR-C-271
Finish	:	Painted
Temperature range	:	-40°C up to +200°C, Polar Rated
Standard certification	:	Certificate of Conformity 3.1 material certificate EN 10204

Non-standard sizes or custom products available on request

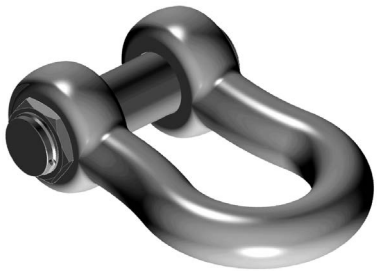

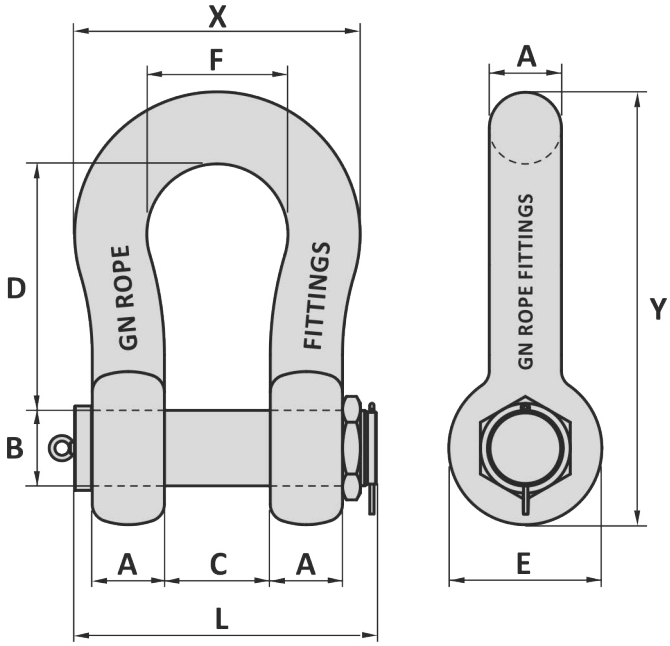

* Shackles from WLL 1250 ton completed with eyebolts on both sides

Art. No.	WLL ton	A mm	B mm	C mm	D mm	E mm	F mm	L mm	X mm	Y mm	Weight kg
37001209	120	89	95	150	380	200	238	420	416	617	110
37001509	150	102	108	170	400	230	275	475	479	671	160
37002009	200	120	125	180	500	260	290	520	530	813	235
37002509	250	125	140	205	540	260	305	560	555	865	285
37003009	300	130	150	205	600	305	305	570	565	958	340
37004009	400	165	175	230	680	350	325	665	655	1108	560
37005009	500	180	185	255	700	370	350	720	710	1158	685
37006009	600	195	205	285	700	405	375	815	765	1200	880
37007009	700	205	217	310	700	435	400	860	810	1231	980
37008009	800	210	217	310	700	435	400	870	820	1236	1100
37009009	900	220	230	330	700	465	420	910	860	1268	1280
37010009	1000	230	240	350	750	480	420	950	880	1290	1460
37012509	1250	278	270	370	780	590	450	1105	1010	1490	2320
37015009	1500	280	290	370	800	610	450	1105	1010	1530	2450
37017509	1750	300	330	430	950	660	540	1230	1140	1745	3280
37020009	2000	320	360	460	1050	680	560	1300	1200	1890	3920

Tolerance: Inside length ± 7.5%, all other forged parts ± 5%, machined parts ± 1 mm

10-06-2014

BOW SAFETY PIN SHACKLE (SUPER) TYPE H10 SUPER

Material : Alloy steel
Safety factor : 5 times
Finish : ≤ 55 ton galvanized
> 55 ton painted
Temperature range : ≤ 55 ton -20°C up to +200°C
> 55 ton -40°C up to +200°C, Polar Rated
Standard certification : Certificate of Conformity
3.1 material certificate EN 10204
≤ 300 ton Type Approved Product

Non-standard sizes or custom products available on request

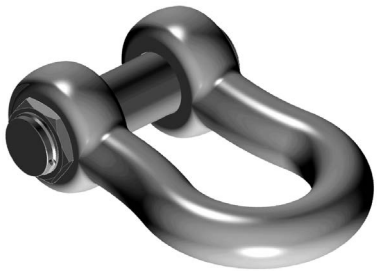

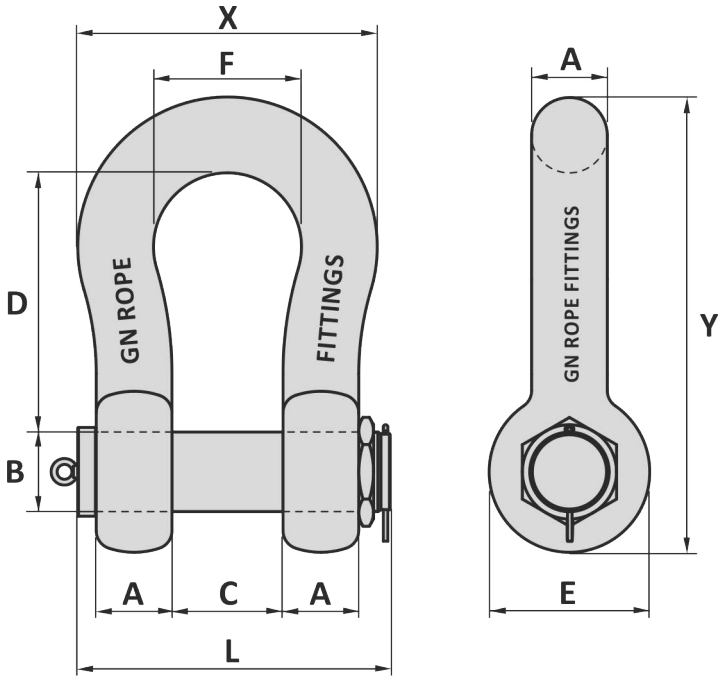

* Shackles from WLL 30 ≤ 120 ton are not supplied with an eyebolt

Art. No.	WLL ton	A mm	B mm	C mm	D mm	E mm	F mm	L mm	X mm	Y mm	Weight kg
38000259	30	38	42	60	146	88	99	202	175	249	8.4
38000400	40	45	50	74	178	103	126	249	216	300	15
38000550	55	57	57	83	197	117	138	286	252	341	22
37000855	85	70	70	105	260	143	180	344	320	437	42
37001105	120	80	83	127	329	162	190	372	350	532	70
37001409	150	90	95	135	380	200	240	405	420	613	110
37001759	175	102	108	140	400	230	250	440	450	669	150
37002008	200	120	121	180	500	260	290	525	530	811	225
37002508	250	125	127	220	520	260	325	575	575	839	300
37003008	300	135	152	220	500	305	330	605	610	869	352
37004008	400	165	178	220	572	350	330	655	655	1001	537

Tolerance: Inside length ± 7.5%, all other forged parts ± 5%, machined parts ± 1 mm

Art. No.	WLL ton	A inch	B inch	C inch	D inch	E inch	F inch	L inch	X inch	Y inch	Weight lbs
38000259	30	1 ½	1 21/32	2 ⅜	5 ¾	3 15/32	3 29/32	7 15/16	6 ⅞	9 13/16	19
38000400	40	1 25/32	1 31/32	2 29/32	7	4 1/16	4 31/32	9 13/16	8 ½	11 13/16	33
38000550	55	2 ¼	2 ¼	3 ¼	7 ¾	4 ⅝	5 7/16	11 ¼	9 15/16	13 7/16	49
37000855	85	2 ¾	2 ¾	4 ⅛	10 ¼	5 ⅝	7 3/32	13 9/16	12 19/32	17 3/16	93
37001105	120	3 5/32	3 ¼	5	12 15/16	6 ⅜	7 15/32	14 21/32	13 25/32	20 15/16	154
37001409	150	3 9/16	3 ¾	5 5/16	14 31/32	7 ⅞	9 7/16	15 15/16	16 17/32	24 ⅛	243
37001759	175	4	4 ¼	5 ½	15 ¾	9 1/16	9 27/32	17 5/16	17 23/32	26 11/32	331
37002008	200	4 23/32	4 ¾	7 3/32	19 11/16	10 ¼	11 13/32	20 11/16	20 ⅞	31 15/16	496
37002508	250	4 15/16	5	8 21/32	20 15/32	10 ¼	12 13/16	22 ⅝	22 ⅝	33 1/32	661
37003008	300	5 5/16	6	8 21/32	19 11/16	12	13	23 13/16	24	34 7/32	776
37004008	400	6 ½	7	8 21/32	22 7/16	13 25/32	13	25 25/32	25 25/32	39 13/32	1184

Tolerance: Inside length ± 7.5%, all other forged parts ± 5%, machined parts ± 1/32 inch

08-05-2018

DEE SAFETY PIN SHACKLE TYPE D15

Material	:	Alloy steel
Safety factor	:	5 times
Finish	:	Painted
Temperature range	:	-40°C up to +200°C, Polar Rated
Standard certification	:	Certificate of Conformity 3.1 material certificate EN 10204

Non-standard sizes or custom products available on request

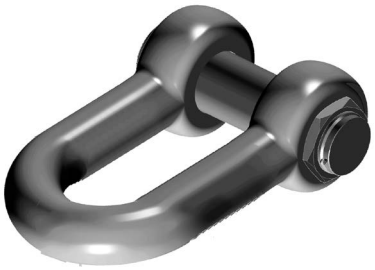

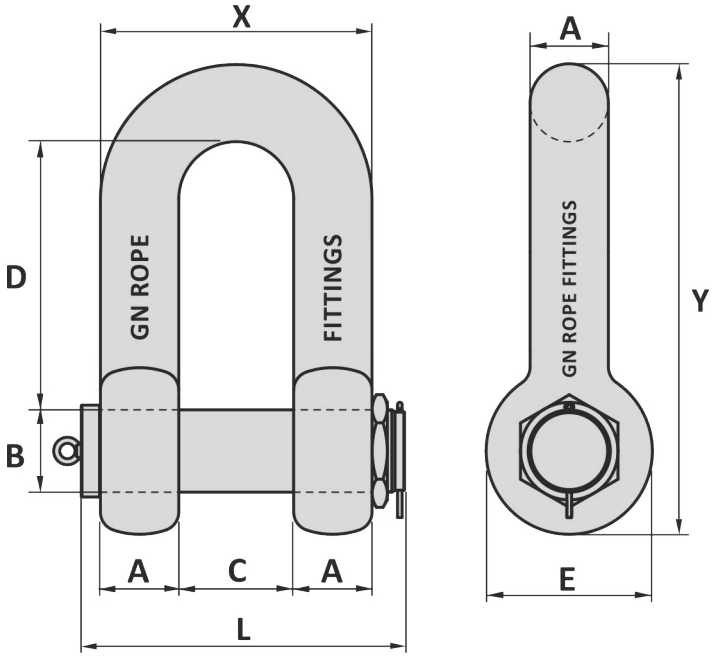

Art. No.	WLL ton	A mm	B mm	C mm	D mm	E mm	L mm	X mm	Y mm	Weight kg
32001209	120	89	95	150	270	200	420	328	504	100
32001508	150	102	108	170	315	230	475	374	586	143
32100115	175	100	110	150	360	220	450	350	625	135
32002009	200	120	125	180	500	260	520	420	813	239
32130140	250	130	140	195	460	280	565	455	795	268
32140152	300	140	150	205	500	300	595	485	855	332
32150164	350	150	160	220	520	320	630	520	910	403
32160170	400	160	170	235	580	340	665	555	965	484
32170180	450	170	180	250	600	360	700	590	1025	576
32180192	500	180	190	265	620	380	735	625	1080	678
32190205	550	190	215	285	665	405	795	665	1165	840

Tolerance: Inside length ± 7.5%, all other forged parts ± 5%, machined parts ± 1 mm

Art. No.	WLL ton	A inch	B inch	C inch	D inch	E inch	L inch	X inch	Y inch	Weight lbs
32001209	120	3 1/2	3 3/4	5 29/32	10 5/8	7 7/8	16 17/32	12 29/32	19 27/32	220
32001508	150	4	4 1/4	6 11/16	12 13/32	9 1/16	18 11/16	14 23/32	23 1/16	315
32100115	175	3 15/16	4 5/16	5 29/32	14 3/16	8 21/32	17 23/32	13 25/32	24 5/8	298
32002009	200	4 23/32	4 15/16	7 3/32	19 11/16	10 1/4	20 15/32	16 17/32	32	527
32130140	250	5 1/8	5 1/2	7 11/16	18 1/8	11 1/32	22 1/4	17 29/32	31 5/16	591
32140152	300	5 1/2	5 29/32	8 1/16	19 11/16	11 13/16	23 7/16	19 3/32	33 21/32	732
32150164	350	5 29/32	6 5/16	8 21/32	20 15/32	12 19/32	24 13/16	20 15/32	35 13/16	888
32160170	400	6 5/16	6 11/16	9 1/4	22 27/32	13 3/8	26 3/16	21 27/32	38	1067
32170180	450	6 11/16	7 3/32	9 27/32	23 5/8	14 3/16	27 9/16	23 7/32	40 11/32	1270
32180192	500	7 3/32	7 15/32	10 7/16	24 13/32	14 31/32	28 15/16	24 5/8	42 1/2	1495
32190205	550	7 15/32	8 15/32	11 7/32	26 3/16	15 15/16	32 5/16	26 3/16	45 7/8	1852

Tolerance: Inside length ± 7.5%, all other forged parts ± 5%, machined parts ± 1/32 inch

27-01-2015

HEAVY DUTY DOUBLE NUT SHACKLE TYPE H11

Material	:	Alloy steel
Safety factor	:	5 times
Finish	:	Galvanized with stainless steel cotter pins
Temperature range	:	-40°C up to +200°C, Polar Rated
Standard certification	:	Certificate of Conformity 3.1 material certificate EN 10204

Non-standard sizes or custom products available on request

Ensure that the load is centralized on the pin
When there is too much space in the jaw gap, we advise to use washers
These are available on request

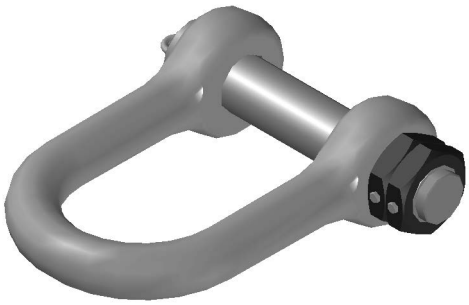

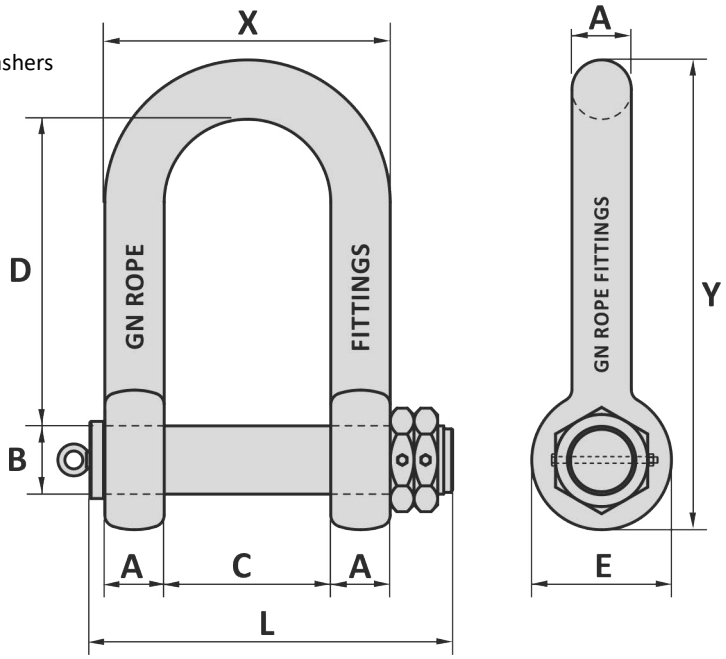

* Shackles WLL 34 and 60 ton are not supplied with an eyebolt

Art. No.	WLL ton	MBL ton	Thimble size inch	A mm	B mm	C mm	D mm	E mm	L mm	X mm	Y mm	Weight kg
38526509	34	170	8 ½ - 10	50	65	140	285	115	345	240	425	23
38657609	60	300	11 - 13	70	76	175	350	165	430	315	541	59
38769009	85	425	14 - 15	80	90	220	390	178	505	380	604	85
38891029	110	550	16 - 18	90	100	254	430	210	575	434	675	122
38902119	130	650	19 - 21	100	114	290	480	235	620	480	755	170
38910009	200	1000	19 - 21	125	133	300	600	265	695	550	924	282
38925139	225	1125	22 - 24	130	146	333	720	305	735	593	1075	349
Special heavy duty double nut shackle												
32105120	200	498	18	105	120	254	500	228	610	464	779	205
32115125	200	498	21	115	125	285	520	238	655	510	797	244
32115126	250	612	15	115	125	220	400	238	595	450	697	203
32125131	250	612	18	125	130	254	500	238	650	504	809	248
32125138	250	612	21	125	130	285	480	260	675	530	800	274

Tolerance: Inside length ± 7.5%, all other forged parts ± 5%, machined parts ± 1 mm

Art. No.	WLL ton	MBL ton	Thimble size inch	A inch	B inch	C inch	D inch	E inch	L inch	X inch	Y inch	Weight lbs
38526509	34	170	8 ½ - 10	1 31/32	2 9/16	5 ½	11 7/32	4 17/32	13 19/32	9 7/16	16 ¾	51
38657609	60	300	11 - 13	2 ¾	3	6 ⅞	13 25/32	6 ½	16 15/16	12 13/32	21 5/16	130
38769009	85	425	14 - 15	3 5/32	3 15/16	8 21/32	15 11/32	7	19 ⅞	14 31/32	23 25/32	187
38891029	110	550	16 - 18	3 9/16	3 15/16	10	16 15/16	8 ¼	22 ⅝	17 3/32	26 9/16	269
38902119	130	650	19 - 21	3 15/16	4 ½	11 13/32	18 29/32	9 ¼	24 13/32	18 29/32	29 23/32	375
38910009	200	1000	19 - 21	4 15/16	5 ¼	11 13/16	23 ⅝	10 7/16	27 ⅜	21 21/32	36 ⅜	622
38925139	225	1125	22 - 24	5 ⅛	5 ¾	13 ⅛	28 11/32	12	28 15/16	23 11/32	42 5/16	769
Special heavy duty double nut shackle												
32105120	200	498	18	4 ⅛	4 23/32	10	19 11/16	8 31/32	24	18 ¼	30 11/16	452
32115125	200	498	21	4 17/32	4 15/16	11 7/32	20 15/32	9 ⅜	25 25/32	20 1/16	31 ⅜	538
32115126	250	612	15	4 17/32	4 15/16	8 21/32	15 ¾	9 ⅜	23 7/16	17 23/32	27 7/16	448
32125131	250	612	18	4 15/16	5 ⅛	10	19 11/16	9 ⅜	25 19/32	19 27/32	31 27/32	547
32125138	250	612	21	4 15/16	5 ⅛	11 7/32	18 29/32	10 ¼	26 9/16	20 ⅞	31 ½	604

Tolerance: Inside length ± 7.5%, all other forged parts ± 5%, machined parts ± 1/32 inch

16-02-2016

DOUBLE PIN / SNOTTER SHACKLE

TYPE H12

Material : Body: High tensile steel
Pin: Alloy steel
Finish : Painted
Temperature range : -20°C up to +200°C
Standard certification : Certificate of Conformity
3.1 material certificate EN 10204

Non-standard sizes or custom products available on request

Ensure that the load is centralized on the pin
When there is too much space in the jaw gap, we advise to use washers
These are available on request

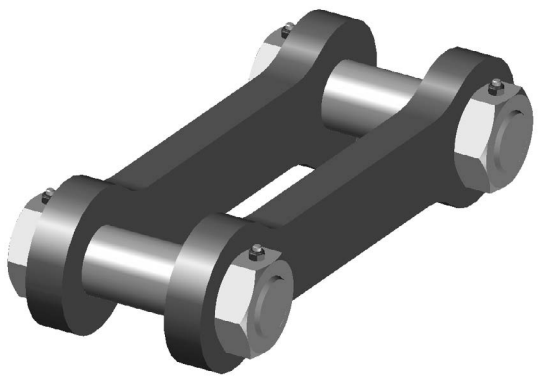

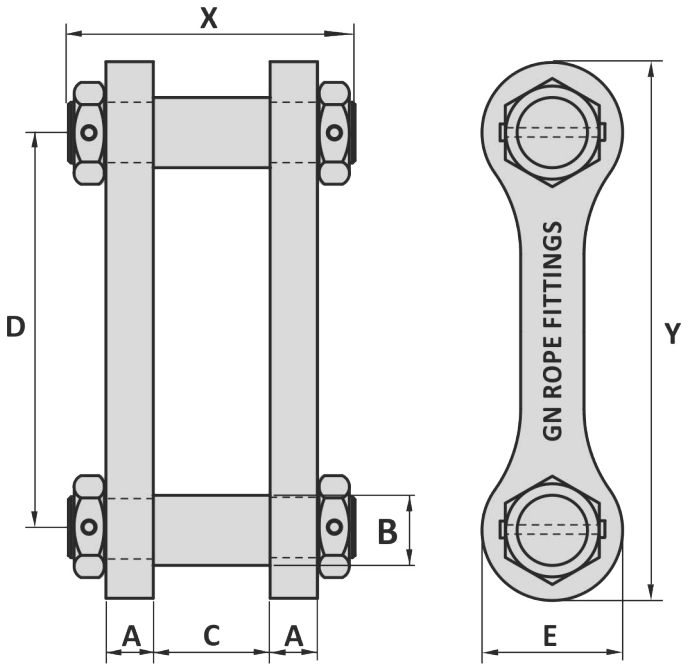

Art. No.	Thimble size inch	PL ton	MBL ton	A mm	B mm	C mm	D mm	E mm	X mm	Y mm	Weight kg
38120000	12	300	500	90	110	170	540	190	520	750	211
38150000	15	300	500	90	110	200	540	190	550	750	216
38180000	18	300	500	90	110	225	710	190	575	920	244
38210000	21	300	500	90	110	250	710	190	600	920	250

Tolerance: Inside length ± 7.5%, all other forged parts ± 5%, machined parts ± 1 mm

Art. No.	Thimble size inch	PL ton	MBL ton	A inch	B inch	C inch	D inch	E inch	X inch	Y inch	Weight lbs
38120000	12	300	500	3 9/16	4 5/16	6 11/16	21 1/4	7 15/32	20 15/32	29 17/32	465
38150000	15	300	500	3 9/16	4 5/16	7 7/8	21 1/4	7 15/32	21 21/32	29 17/32	476
38180000	18	300	500	3 9/16	4 5/16	8 7/8	27 15/16	7 15/32	22 5/8	36 7/32	538
38210000	21	300	500	3 9/16	4 5/16	9 27/32	27 15/16	7 15/32	23 5/8	36 7/32	551

Tolerance: Inside length ± 7.5%, all other forged parts ± 5%, machined parts ± 1/32 inch

10-06-2014

WIDE BODY SHACKLE

TYPE H14

Material : Alloy steel
Safety factor : ≤ 2000 ton 5 times
> 2000 ≤ 3000 ton 4,5 times
> 3000 ton 4 times
Finish : Painted
Temperature range : ≤ 40 ton -4°F up to +392°F
> 40 ton -40°F up to +392°F, Polar Rated
Standard certification : Certificate of Conformity
3.1 material certificate EN 10204

Non-standard sizes or custom products available on request

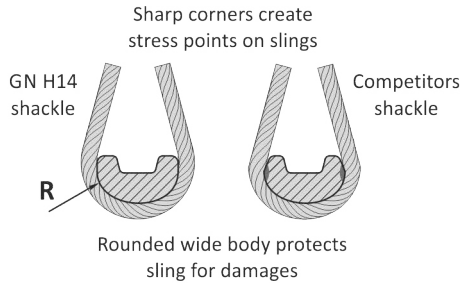

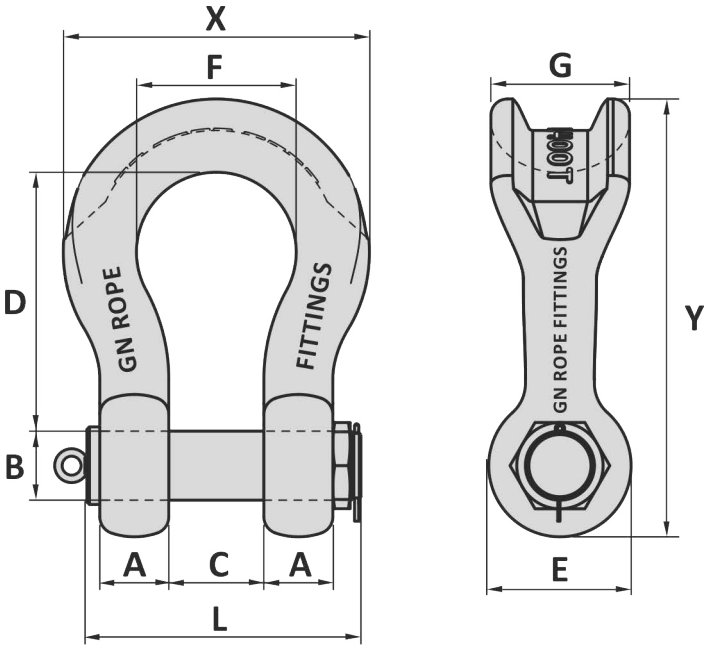

* Shackles from WLL 30 ≤ 125 ton are not supplied with an eyebolt, shackles from WLL 900 ton completed with eyebolts on both sides

Art. No.	WLL ton	A inch	B inch	C inch	D inch	E inch	F inch	G inch	L inch	R inch	X inch	Y inch	Weight lbs
36000025	30	1 3/8	1 3/4	2 9/16	7 3/32	3 9/16	5 1/32	3 5/32	7 15/16	1 25/32	8 1/32	11 1/2	31
36000040	40	1 25/32	2	3 5/16	7 7/8	4 9/32	5 1/2	3 13/16	9 15/16	2 3/32	9 1/8	13 1/32	46
36000055	55	2 9/16	2 3/16	3 3/4	9 27/32	5 1/8	6 5/16	4 5/16	11 13/16	2 5/32	11 11/32	15 3/4	73
36000075	75	2 15/16	2 3/4	4 5/16	11 13/16	5 29/32	7 9/32	4 23/32	13 19/32	2 3/8	13 5/32	19 3/32	117
36000125	125	3 11/32	3 5/32	5 1/2	14 9/16	6 1/2	8 21/32	5 29/32	15 9/16	3 5/32	15 11/32	22 15/16	185
36000150	150	3 9/16	3 3/4	5 29/32	15 3/4	7 7/8	9 27/32	6 11/16	16 17/32	3 9/16	16 7/8	25 1/8	254
36000200	200	4 1/8	4 1/8	6 5/16	18 29/32	8 7/8	10 13/16	8 1/16	18 1/2	4 5/16	19 1/16	29 23/32	403
36000250	250	4 23/32	4 23/32	7 3/32	21 21/32	9 7/16	11 13/16	9 1/16	20 15/32	4 15/16	21 1/4	33 15/32	562
36000300	300	5 1/2	5 9/32	7 11/16	23 5/8	11 1/32	13 25/32	10 7/16	22 27/32	5 1/2	24 23/32	37 9/32	811
36000400	400	6 5/16	6 5/16	9 1/16	24 13/32	13	14 9/16	12 19/32	25 25/32	6 11/16	27 1/8	40 3/4	1259
36000500	500	6 11/16	7 3/32	10 7/16	26 25/32	13 25/32	17 5/16	13 3/8	27 15/16	7 3/32	30 11/16	44 9/32	1585
36000600	600	7 3/32	7 7/8	11 13/32	28 11/32	15 15/16	19 9/32	14 9/16	31 5/16	7 15/32	33 11/32	47 3/4	2116
36000700	700	8 1/4	8 15/32	12 19/32	30 23/32	18 5/16	21 1/4	15 3/4	34 21/32	8 1/4	37 11/16	52 3/8	2976
36000800	800	8 21/32	9 1/16	13 19/32	31 1/2	18 5/16	21 27/32	16 17/32	36 13/32	8 21/32	38 31/32	53 15/32	3086
36000900	900	9 1/4	9 27/32	14 9/16	33 15/32	18 29/32	23 1/32	17 5/16	39 3/4	9 1/4	41 3/4	57 3/32	4079
36001000	1000	9 1/4	10 5/8	15 3/4	33 15/32	20 7/8	24 7/32	18 1/8	41 11/32	9 7/16	42 15/16	58 21/32	4519
36001250	1250	10 13/16	11 13/16	17 29/32	37 13/16	22 7/16	25 3/8	22 1/16	47 5/8	11 7/32	47 7/16	66 3/4	6614
36001500	1550	10 13/16	12 19/32	19 3/32	38 19/32	24	26 25/32	22 27/32	48 13/16	11 13/32	48 13/16	68 11/16	7275
36001750	1750	12 3/16	14 3/16	19 11/16	44 3/32	26	27 9/16	23 5/8	52 5/32	11 13/16	53	77 5/32	10362
36002000	2000	12 19/32	15 5/32	20 15/32	44 7/8	26 25/32	28 11/32	24 13/32	53 3/4	12 3/16	53 7/8	79 7/32	10582
36002500	2500	13	15 3/4	20 15/32	44 7/8	29 1/8	28 3/8	25	54 5/16	12 19/32	54 7/16	81 5/16	11905
36003000	3000	13 3/8	16 17/32	20 7/8	44 7/8	29 15/16	29 1/8	25 19/32	55 1/2	13	55 5/8	81 7/8	12787
36003500	3500	13 25/32	17 5/16	21 1/4	44 7/8	31 3/32	29 17/32	26 3/8	58 1/4	13 3/8	58 1/4	83 7/8	14991
36004000	4000	14 3/16	18 1/8	21 21/32	44 7/8	31 7/8	29 15/16	27 5/32	59 7/16	13 25/32	59 7/16	84 1/4	15873

Tolerance: Inside length ± 7.5%, all other forged parts ± 5%, machined parts ± 1/32 inch

30-06-2015

Material : Alloy steel
Safety factor : ≤ 2000 ton 5 times
> 2000 ≤ 3000 ton 4,5 times
> 3000 ton 4 times
Finish : Painted
Temperature range : ≤ 40 ton -20°C up to +200°C
> 40 ton -40°C up to +200°C, Polar Rated
Standard certification : Certificate of Conformity
3.1 material certificate EN 10204

Non-standard sizes or custom products available on request

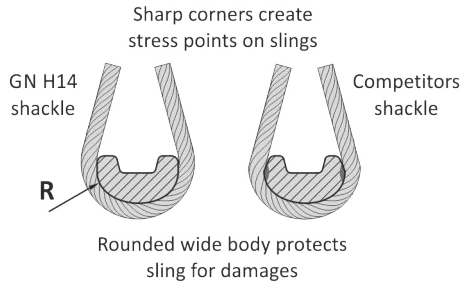

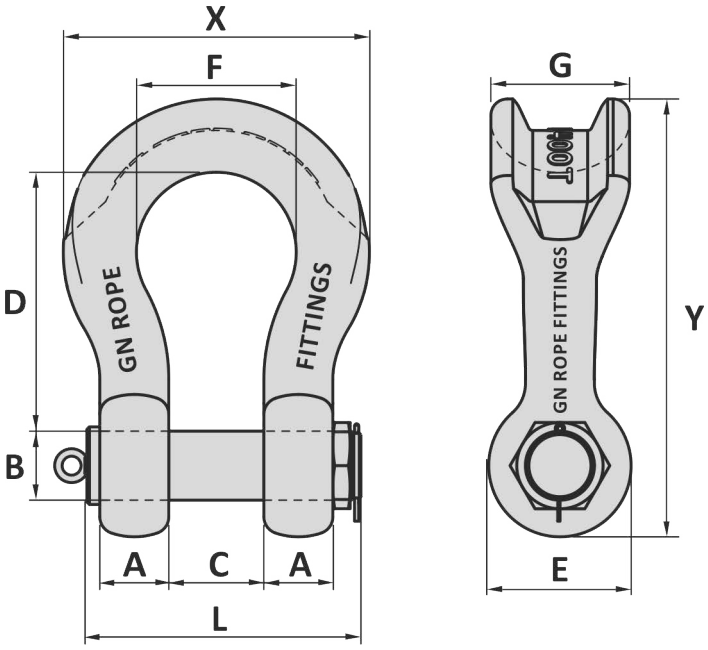

* Shackles from WLL 30 ≤ 125 ton are not supplied with an eyebolt, shackles from WLL 900 ton completed with eyebolts on both sides

Art. No.	WLL ton	A mm	B mm	C mm	D mm	E mm	F mm	G mm	L mm	R mm	X mm	Y mm	Weight kg
36000025	30	35	44	65	180	90	128	80	202	45	204	292	14
36000040	40	45	51	84	200	109	140	97	252	53	232	331	21
36000055	55	65	56	95	250	130	160	110	300	55	288	400	33
36000075	75	75	70	110	300	150	185	120	345	60	334	485	53
36000125	125	85	80	140	370	165	220	150	395	80	390	583	84
36000150	150	90	95	150	400	200	250	170	420	90	429	638	115
36000200	200	105	105	160	480	225	275	205	470	110	484	755	183
36000250	250	120	120	180	550	240	300	230	520	125	540	850	255
36000300	300	140	134	195	600	280	350	265	580	140	628	947	368
36000400	400	160	160	230	620	330	370	320	655	170	689	1035	571
36000500	500	170	180	265	680	350	440	340	710	180	779	1125	719
36000600	600	180	200	290	720	405	490	370	795	190	847	1213	960
36000700	700	210	215	320	780	465	540	400	880	210	957	1330	1350
36000800	800	220	230	345	800	465	555	420	925	220	990	1358	1400
36000900	900	235	250	370	850	480	585	440	1010	235	1060	1450	1850
36001000	1000	235	270	400	850	530	615	460	1050	240	1091	1490	2050
36001250	1250	275	300	455	960	570	645	560	1210	285	1205	1695	3000
36001500	1550	275	320	485	980	610	680	580	1240	290	1240	1745	3300
36001750	1750	310	360	500	1120	660	700	600	1325	300	1346	1960	4700
36002000	2000	320	385	520	1140	680	720	620	1365	310	1368	2012	4800
36002500	2500	330	400	520	1140	740	730	635	1380	320	1383	2065	5400
36003000	3000	340	420	530	1140	760	740	650	1410	330	1413	2080	5800
36003500	3500	350	440	540	1140	790	750	670	1480	340	1480	2130	6800
36004000	4000	360	460	550	1140	810	760	690	1510	350	1510	2140	7200

Tolerance: Inside length ± 7.5%, all other forged parts ± 5%, machined parts ± 1 mm

30-06-2015

CROWN PIN SHACKLE

TYPE D10

Material : ≤ 31999999 bow: High tensile steel
> 32140152 bow: Alloy steel
Pin: High tensile steel
Finish : Self colored
Temperature range : -20°C up to +200°C
Standard certification : Certificate of Conformity

Non-standard sizes or custom products available on request

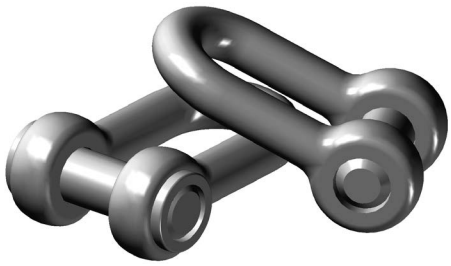

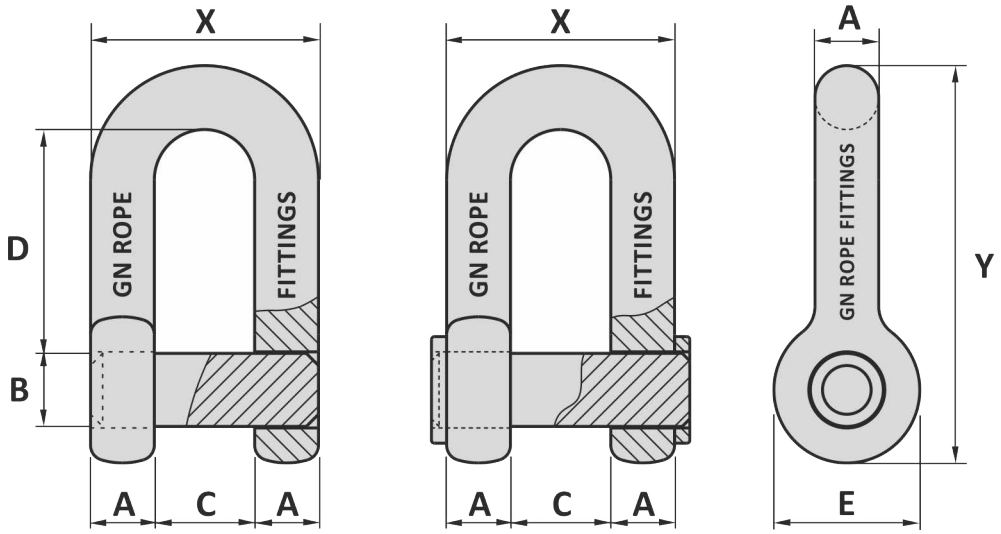

Type for A = 61 ≤ 125 mm Type for A = 140 ≤ 190 mm

Art. No.	A mm	B mm	C mm	D mm	E mm	X mm	Y mm	Weight kg
31606830	61	68	90	211	136	212	374	30
31708040	74	80	100	234	160	258	440	49
31809040	75	90	125	276	180	275	486	75
31901004	90	95	135	307	200	316	545	100
31950000	100	110	155	339	230	347	600	130
31990000	110	125	175	385	250	395	684	180
31999999	125	140	200	430	280	450	765	260
32140152	140	150	210	475	305	490	843	335
32150164	150	160	220	525	330	520	920	413
32160170	160	170	235	560	340	555	975	500
32170180	170	180	250	610	350	590	1045	601
32180192	180	190	270	650	380	630	1115	716
32190205	190	200	280	690	405	660	1183	839

Tolerance: Inside length ± 7.5%, all other forged parts ± 5%, machined parts ± 1 mm

Art. No.	A inch	B inch	C inch	D inch	E inch	X inch	Y inch	Weight lbs
31606830	2 13/32	2 11/16	3 9/16	8 5/16	5 11/32	8 11/32	14 23/32	66
31708040	2 29/32	3 5/32	3 15/16	9 7/32	6 5/16	10 5/32	17 5/16	108
31809040	2 15/16	3 9/16	4 15/16	10 7/8	7 3/32	10 13/16	19 1/8	165
31901004	3 9/16	3 3/4	5 5/16	12 3/32	7 7/8	12 7/16	21 7/16	220
31950000	3 15/16	4 5/16	6 3/32	13 11/32	9 1/16	13 21/32	23 5/8	287
31990000	4 5/16	4 15/16	6 7/8	15 5/32	9 27/32	15 9/16	26 15/16	397
31999999	4 15/16	5 1/2	7 7/8	16 15/16	11 1/32	17 23/32	30 1/8	573
32140152	5 1/2	5 29/32	8 1/4	18 11/16	12	19 9/32	33 3/16	739
32150164	5 29/32	6 5/16	8 21/32	20 11/16	13	20 15/32	36 7/32	911
32160170	6 5/16	6 11/16	9 1/4	22 1/16	13 3/8	21 27/32	38 3/8	1102
32170180	6 11/16	7 3/32	9 27/32	24	13 25/32	23 7/32	41 1/8	1325
32180192	7 3/32	7 15/32	10 5/8	25 19/32	14 31/32	24 13/16	43 29/32	1579
32190205	7 15/32	7 7/8	11 1/32	27 5/32	15 15/16	26	46 9/16	1850

Tolerance: Inside length ± 7.5%, all other forged parts ± 5%, machined parts ± 1/32 inch

01-04-2017

END JOINING SHACKLE WITH ROUND PIN TYPE D14

Material	:	Alloy steel, Grade R3/R3S/R4/R4S/R5
Finish	:	Painted
Standards	:	ABNT NBR 13715
Temperature range	:	-40°C up to +200°C, Polar Rated
Standard certification	:	Certificate of Conformity 3.1 material certificate EN 10204

Also to be used for mooring applications
Non-standard sizes or custom products available on request

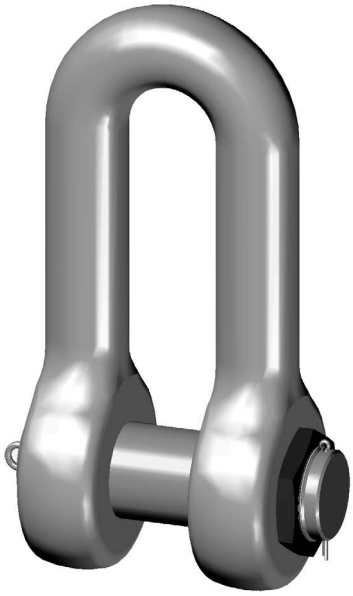

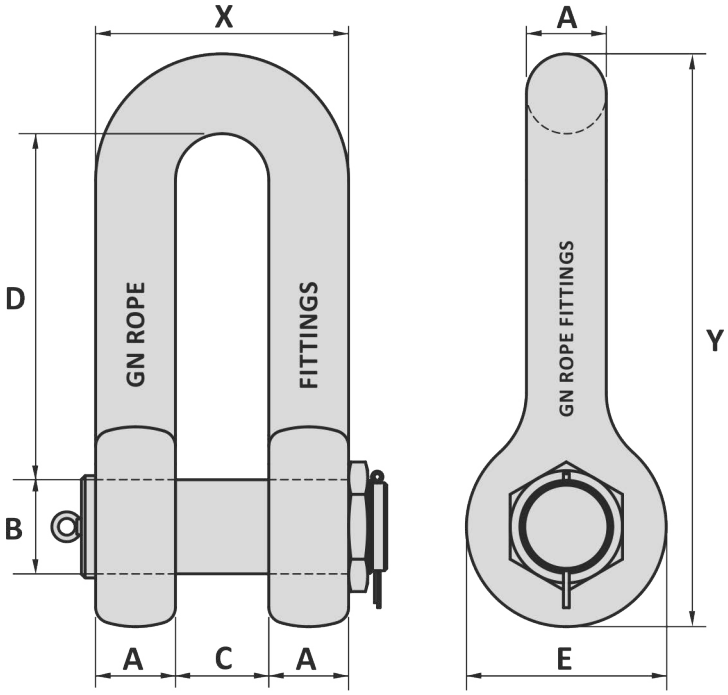

Dimensions for shackles are calculated by multiplying the common link size by the factor shown below

Dimensions related to nominal chain diameter
A = 1.2 x chain diameter
B = 1.4 x chain diameter
C = 1.4 x chain diameter
D = 5.2 x chain diameter
E = 3.0 x chain diameter
X = 3.8 x chain diameter
Y = 8.6 x chain diameter

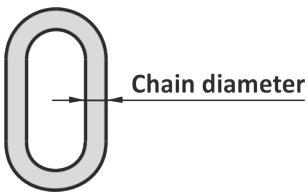

Tolerance: According ABNT NBR 13715

10-06-2014

JOINING SHACKLE WITH PEAR SHAPE PIN TYPE D16

Material	:	Alloy steel, Grade R3/R3S/R4/R4S/R5
Finish	:	Painted
Standards	:	ISO 1704
Temperature range	:	-40°C up to +200°C, Polar Rated
Standard certification	:	Certificate of Conformity 3.1 material certificate EN 10204

Also to be used for mooring applications
Non-standard sizes or custom products available on request

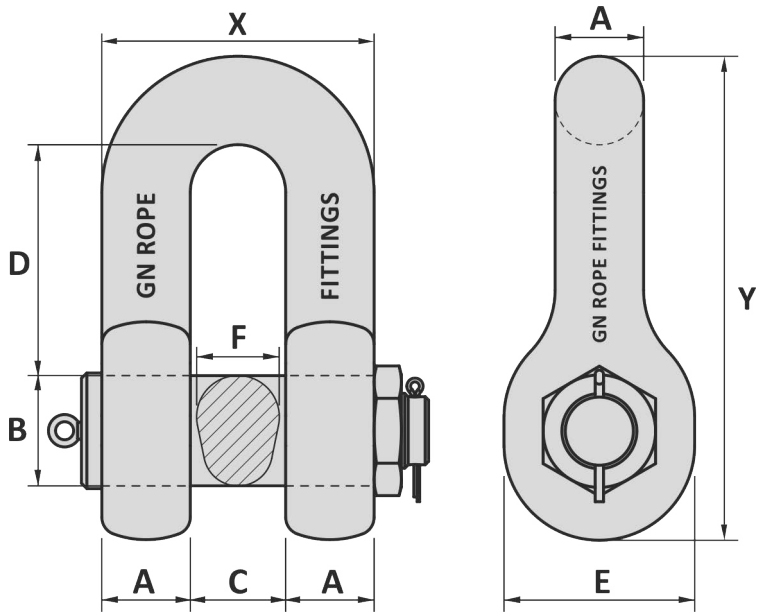

Dimensions for shackles are calculated by multiplying the common link size by the factor shown below

Dimensions related to nominal chain diameter
A = 1.3 x chain diameter
B = 1.6 x chain diameter
C = 1.4 x chain diameter
D = 3.4 x chain diameter
E = 2.8 x chain diameter
F = 1.2 x chain diameter
X = 4.0 x chain diameter
Y = 7.1 x chain diameter

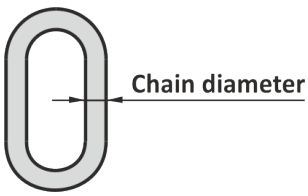

Tolerance: According ISO 1704

28-12-2017

Material	:	Alloy steel, Grade R3/R3S/R4/R4S/R5
Finish	:	Painted
Standards	:	ISO 1704
Temperature range	:	-40°C up to +200°C, Polar Rated
Standard certification	:	Certificate of Conformity 3.1 material certificate EN 10204

Also to be used for mooring applications
Non-standard sizes or custom products available on request

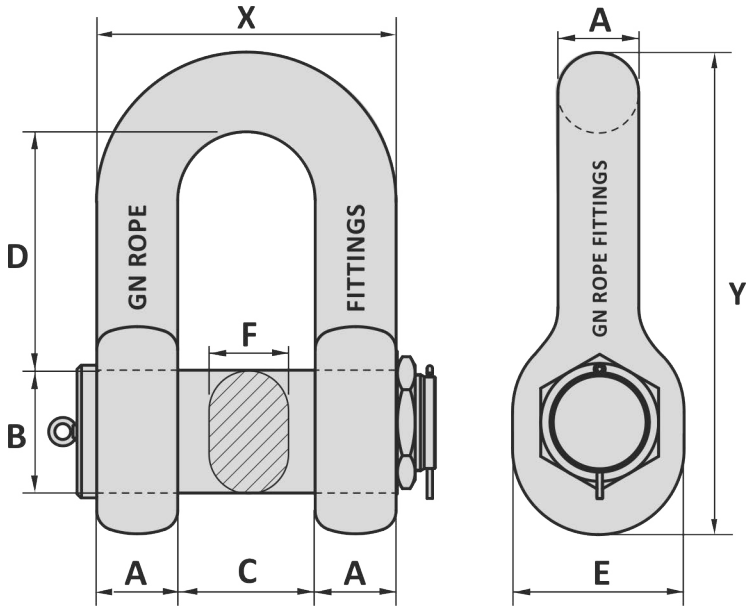

Dimensions for shackles are calculated by multiplying the common link size by the factor shown below

Dimensions related to nominal chain diameter
A = 1.4 x chain diameter
B = 1.8 x chain diameter
C = 2.4 x chain diameter
D = 4.6 x chain diameter
E = 3.1 x chain diameter
F = 1.4 x chain diameter
X = 5.2 x chain diameter
Y = 8.7 x chain diameter

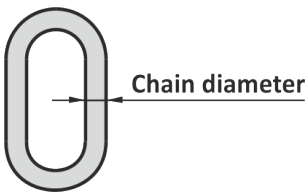

Tolerance: According ISO 1704

10-06-2014

Material	:	Alloy steel
Finish	:	Painted
Temperature range	:	-20°C up to +200°C
Standard certification	:	Certificate of Conformity 3.1 material certificate EN 10204

Non-standard sizes or custom products available on request
Suitable on all our type dee, bow and wide body shackles

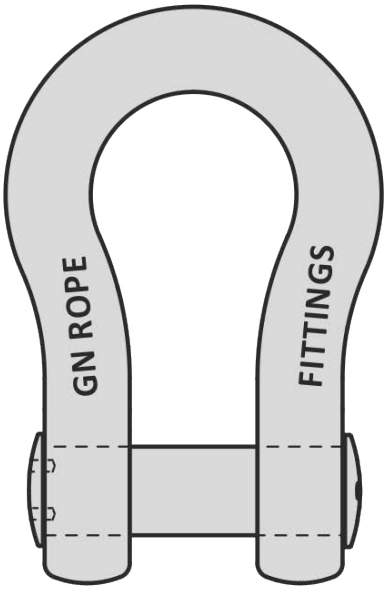

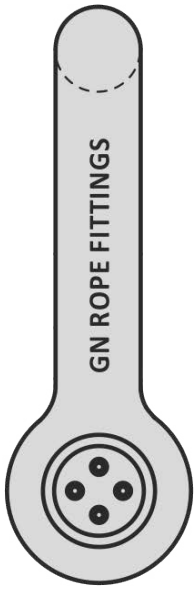

Dimensions according the datasheet of the shackles

Special sizes on request

Material	:	Alloy steel
Finish	:	Painted
Temperature range	:	-20°C up to +200°C
Standard certification	:	Certificate of Conformity 3.1 material certificate EN 10204

Non-standard sizes or custom products available on request
Suitable on all our type dee, bow and wide body shackles

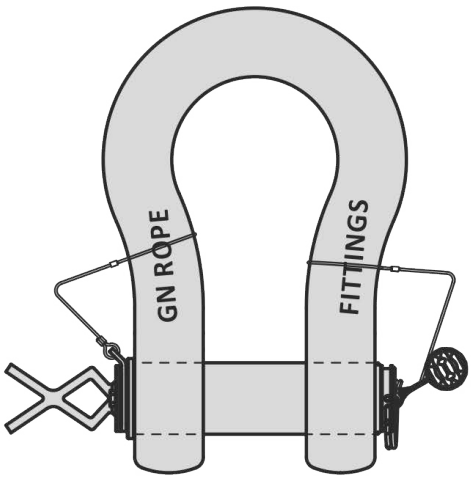

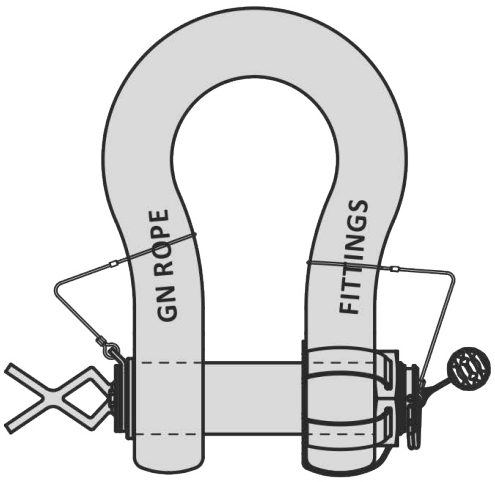

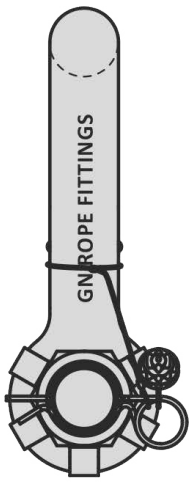

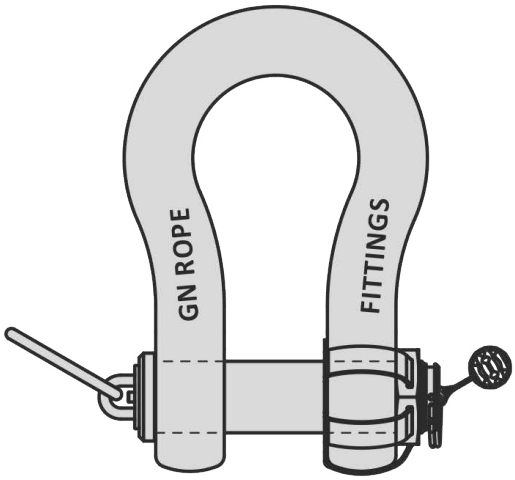

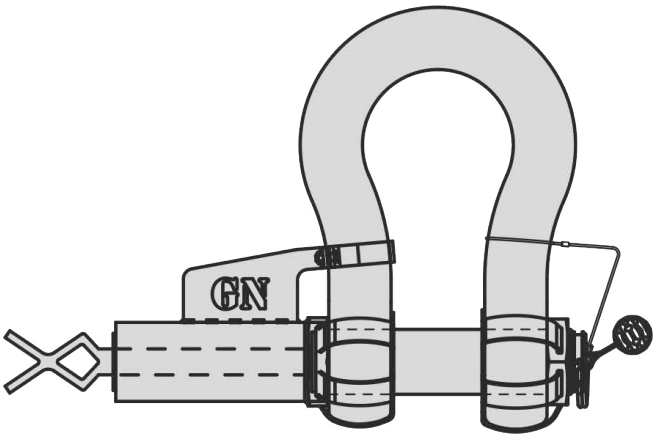

Dimensions according the datasheet of the shackles

Special sizes on request
Also available with: Guidance tube
T-bar
Without nut
Double monkeyfist

NOTES

THIMBLES

K2
Heavy duty stub-end thimble

K2-B
Heavy duty stub-end thimble reinforced

K2-C
High strength thimble

K3
Fibre-rope thimble

K3-B
Fibre-rope thimble reinforced

K4
Egg shaped thimble / Round thimble

K4
Container thimble egg shaped & round

K5
Solid thimble

K10
Thimble with link

K11
Tubular thimble

K12
Tubular thimble with link

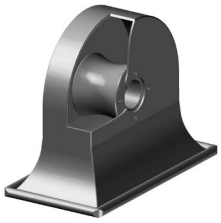

K13
Bellmouth thimble

K14
Cast thimble

K17
Forged roulette thimble

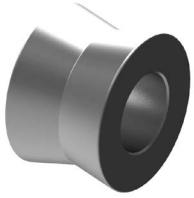

K18
Diabolic spool

Application information

Thimbles are used to protect steel wire rope, fibre rope or synthetic rope
Steel wire rope thimbles: K2, K2-B, K4, and K5
Poly-Fibre rope thimbles: K3, K3-B, K4 and K10
High strength ropes (for example HMPE ropes): we recommend to use K2-C thimbles
SPM/Mooring rope thimbles: K11, K12, K13, K14, K16 and K17

Instructions for use

The dimensions of the thimbles must be so that the (wire) rope fits properly into the groove of the thimble. If thimbles are used in combination with wire clamps, please take notice of the right use of the clamp. The first clip must be placed one bridge width from the turned back rope tail or dead end of the rope. The second clip must be placed immediately against the thimble but nevertheless in such a position that the correct tightening of the clip does not damage the outer wires of the wire rope. The following clips should be placed on the wire rope between the first and second clip in such a way that they are separated by at least 1½ times the clip-width with a maximum of 3 times the clip-width.

first **second** **last**

Loads

There is no specific load, work load, proof load or break load available for thimbles. International recognized standards do not specify loads either. Loads cannot be calculated because of too many variable factors, such as rope diameters, rope stiffness, rope bending radius and behavior. Loads given for type K10 and K12 applies to the master links only!

Inspection

Before use, check if the thimble is free from impurities, sharp edges, cracks or other irregularities which may damage the rope and therefore affect the strength or reliability of the rope.

Retaining bands

On request we can add retaining bands on our K2, K2-B, K2-C, K3, K3-B and K10 thimbles. These retaining bands are to ensure the wire cannot go out of the thimble.

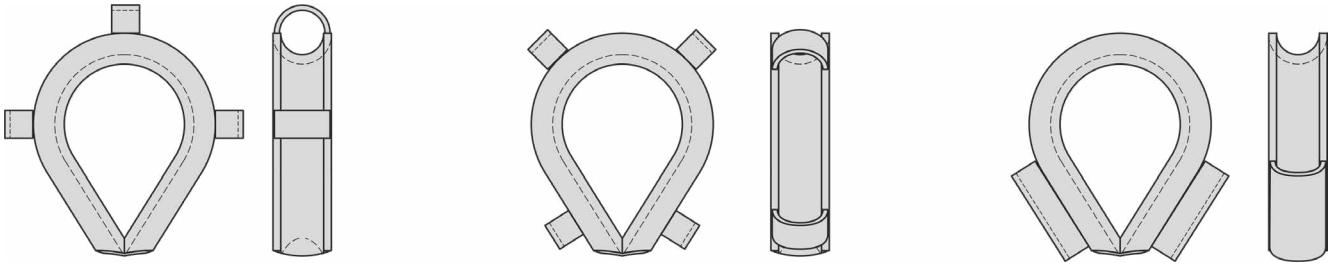

Above some examples of retaining bands, variations and quantities on request.

HEAVY DUTY STUB-END THIMBLE

TYPE K2

Material : Mild steel
Finish : Galvanized
Temperature range : -4°F up to +392°F
Standard certification : Certificate of Conformity

Suitable for wire rope
Non-standard sizes or custom products available on request

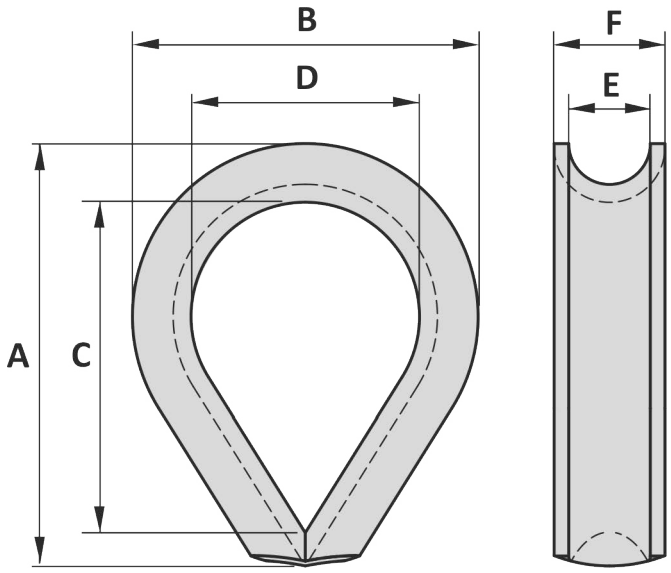

Art. No.	A inch	B inch	C inch	D inch	E inch	F inch	Packing	Weight lbs/100
11020000	2	1 21/32	1 3/8	7/8	11/32	9/16	600	18
11025000	2.5	1 31/32	1 25/32	1 3/16	7/16	5/8	400	22
11030000	3	1 31/32	2 5/32	1 3/8	1/2	23/32	300	44
11035000	3.5	2 7/8	2 9/16	1 25/32	19/32	25/32	150	57
11040000	4	2 15/16	2 15/16	1 31/32	11/16	7/8	150	79
11045000	4.5	3 11/32	3 5/32	2 3/32	3/4	1	75	110
11050000	5	3 15/16	3 9/16	2 3/8	13/16	1 1/8	75	132
11055000	5.5	4 5/16	3 3/4	2 9/16	29/32	1 5/16	40	154
11060000	6	4 17/32	4 23/32	2 3/4	1	1 11/32	40	220
11070000	7	5 5/16	5 1/2	3 5/32	1 3/16	1 1/2	25	353
11080000	8	6 3/32	6 5/16	3 15/16	1 5/16	1 3/4	20	397
11090000	9	6 7/8	7 9/32	4 17/32	1 1/2	1 15/16		772
11100000	10	7 15/32	7 11/16	4 23/32	1 5/8	2 1/16		970
11110000	11	8 1/4	8 15/32	5 1/8	1 13/16	2 3/8		1146
11120000	12	9 21/32	9 27/32	5 23/32	2 1/16	2 9/16		1609
11140000	14	10 1/4	11 13/32	6 3/32	2 3/8	2 27/32		2425
11170000	17	12 3/16	14 9/16	7 15/32	2 3/4	3 5/16		3527
11190000	19	13 25/32	16 17/32	9 1/16	3 3/16	4 11/16		6063
11220000	22	15 9/16	18 29/32	10 1/32	3 5/8	5 1/8		8047
11240000	24	16 15/16	21 1/4	11 1/32	4 1/8	5 23/32		9700
11260000	26	17 23/32	22 27/32	11 7/32	4 23/32	6 3/32		10362

Tolerance: Forged parts ± 5%

19-05-2015

HEAVY DUTY STUB-END THIMBLE TYPE K2

Material : Mild steel
Finish : Galvanized
Temperature range : -20°C up to +200°C
Standard certification : Certificate of Conformity

Suitable for wire rope
Non-standard sizes or custom products available on request

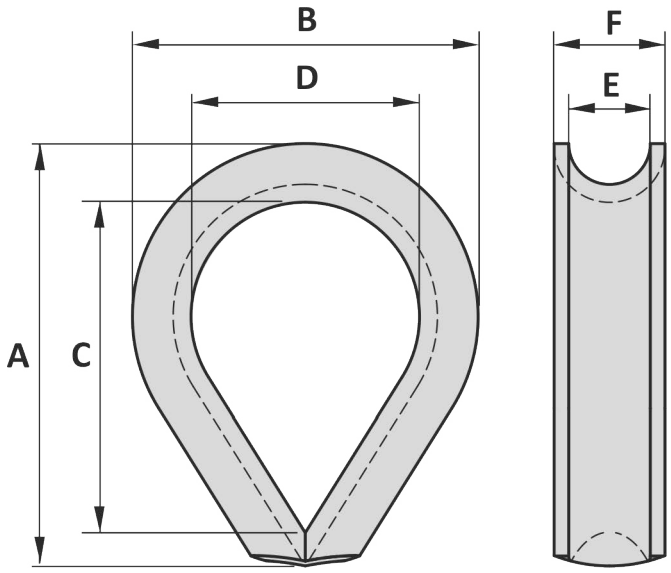

Art. No.	A inch	B mm	C mm	D mm	E mm	F mm	Packing	Weight kg/100
11020000	2	42	35	22	9	14	600	8.2
11025000	2.5	50	45	30	11	16	400	10
11030000	3	50	55	35	13	18	300	20
11035000	3.5	73	65	45	15	20	150	26
11040000	4	75	75	50	17	22	150	36
11045000	4.5	85	80	53	19	25	75	50
11050000	5	100	90	60	21	29	75	60
11055000	5.5	110	95	65	23	33	40	70
11060000	6	115	120	70	25	34	40	100
11070000	7	135	140	80	30	38	25	160
11080000	8	155	160	100	33	44	20	180
11090000	9	175	185	115	38	49		350
11100000	10	190	195	120	41	52		440
11110000	11	210	215	130	46	60		520
11120000	12	245	250	145	52	65		730
11140000	14	260	290	155	60	72		1100
11170000	17	310	370	190	70	84		1600
11190000	19	350	420	230	81	119		2750
11220000	22	395	480	255	92	130		3650
11240000	24	430	540	280	105	145		4400
11260000	26	450	580	285	120	155		4700

Tolerance: Forged parts ± 5%

19-05-2015

HEAVY DUTY STUB-END THIMBLE REINFORCED TYPE K2-B

Material : Mild steel
Finish : Galvanized
Temperature range : -20°C up to +200°C
Standard certification : Certificate of Conformity

Suitable for wire rope
Non-standard sizes or custom products available on request

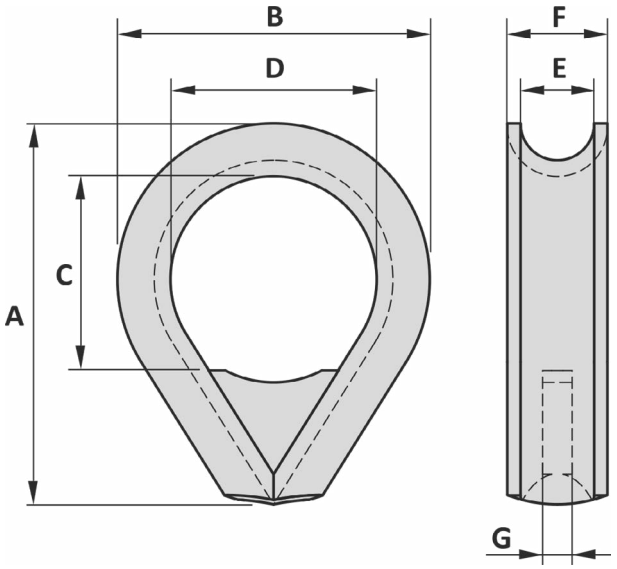

Art. No.	A inch	B mm	C mm	D mm	E mm	F mm	G mm	Packing	Weight kg/100
11040999	4	75	50	50	17	22	6	10	40
11045999	4 ½	85	50	53	19	25	6	10	50
11050999	5	100	60	60	21	29	8	10	80
11055999	5 ½	110	60	65	23	33	8	10	90
11069999	6	115	70	70	25	34	8	10	100
11079999	7	135	75	80	30	38	10	10	170
11089999	8	155	80	100	33	44	10		250
11099999	9	175	110	115	38	49	10		400
11109999	10	190	120	120	41	52	15		450
11119999	11	210	120	130	46	60	15		700
11129999	12	245	140	145	52	65	15		830
11149999	14	260	155	155	60	72	20		1250
11179999	17	310	200	190	70	84	20		1800
11199999	19	350	235	230	81	119	20		3050
11229999	22	395	240	255	92	130	20		4050
11249999	24	430	275	280	105	145	25		4950
11269999	26	450	295	285	120	155	30		5400

Tolerance: Forged parts ± 5%

Art. No.	A inch	B inch	C inch	D inch	E inch	F inch	G inch	Packing	Weight lbs/100
11040999	4	2 15/16	1 31/32	1 31/32	11/16	7/8	1/4	10	88
11045999	4 ½	3 11/32	1 31/32	2 3/32	3/4	1	1/4	10	110
11050999	5	3 15/16	2 3/8	2 3/8	13/16	1 1/8	5/16	10	176
11055999	5 ½	4 5/16	2 3/8	2 9/16	29/32	1 5/16	5/16	10	198
11069999	6	4 17/32	2 3/4	2 3/4	1	1 11/32	5/16	10	220
11079999	7	5 5/16	2 15/16	3 5/32	1 3/16	1 1/2	3/8	10	375
11089999	8	6 3/32	3 5/32	3 15/16	1 5/16	1 3/4	3/8		551
11099999	9	6 7/8	4 5/16	4 17/32	1 1/2	1 15/16	3/8		882
11109999	10	7 15/32	4 23/32	4 23/32	1 5/8	2 1/16	19/32		992
11119999	11	8 1/4	4 23/32	5 1/8	1 13/16	2 3/8	19/32		1543
11129999	12	9 21/32	5 1/2	5 23/32	2 1/16	2 9/16	19/32		1830
11149999	14	10 1/4	6 3/32	6 3/32	2 3/8	2 27/32	25/32		2756
11179999	17	12 3/16	7 7/8	7 15/32	2 3/4	3 5/16	25/32		3968
11199999	19	13 25/32	9 1/4	9 1/16	3 3/16	4 11/16	25/32		6724
11229999	22	15 9/16	9 7/16	10 1/32	3 5/8	5 1/8	25/32		8929
11249999	24	16 15/16	10 13/16	11 1/32	4 1/8	5 23/32	1		10913
11269999	26	17 23/32	11 5/8	11 7/32	4 23/32	6 3/32	1 3/16		11905

Tolerance: Forged parts ± 5%

19-05-2015

Material : Mild steel
Safety factor : ≤ 85 ton 6 times
> 85 ton 5 times
Finish : Painted
Temperature range : -20°C up to +200°C
Standard certification : Certificate of Conformity

Suitable for HMPE rope and wire rope
Non-standard sizes or custom products available on request

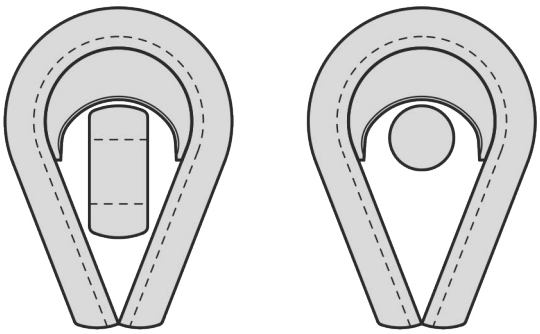

Designed to fit shackle bow and shackle pin

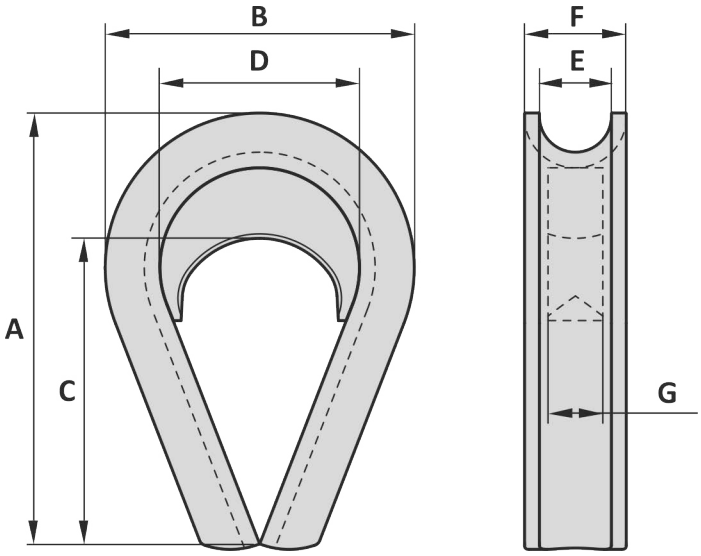

Also available with retaining bands on request

Art. No.	WLL ton	PL kN	MBL ton	Rope mm	A inch	B mm	C mm	D mm	E mm	F mm	G mm	Weight kg
11108888	25	491	150	35 - 38	10	190	180	120	41	52	30	5.5
11118888	35	687	210	39 - 42	11	210	190	130	46	60	40	9.1
11128888	42.5	834	255	44 - 48	12	245	210	145	52	65	40	9.2
11148888	55	1080	330	52 - 56	14	260	245	155	60	72	40	11
11178888	85	1668	510	60 - 64	17	310	320	190	70	84	50	23
11198888	120	2356	600	68 - 76	19	350	350	230	81	119	60	37
11228888	150	2944	750	80 - 89	22	395	390	255	92	130	70	50
11248888	200	3924	1000	92 - 102	24	430	440	280	105	145	80	65
11268888	250	4906	1250	104 - 114	26	450	470	285	120	155	90	76

Tolerance: Forged parts ± 5%

Art. No.	WLL ton	PL kN	MBL ton	Rope mm	A inch	B inch	C inch	D inch	E inch	F inch	G inch	Weight lbs
11108888	25	491	150	35 - 38	10	7 15/32	7 3/32	4 23/32	1 5/8	2 1/16	1 3/16	12
11118888	35	687	210	39 - 42	11	8 1/4	7 15/32	5 1/8	1 13/16	2 3/8	1 9/16	20
11128888	42.5	834	255	44 - 48	12	9 21/32	8 1/4	5 23/32	2 1/16	2 9/16	1 9/16	20
11148888	55	1080	330	52 - 56	14	10 1/4	9 21/32	6 3/32	2 3/8	2 27/32	1 9/16	24
11178888	85	1668	510	60 - 64	17	12 3/16	12 19/32	7 15/32	2 3/4	3 5/16	1 31/32	51
11198888	120	2356	600	68 - 76	19	13 25/32	13 25/32	9 1/16	3 3/16	4 11/16	2 3/8	82
11228888	150	2944	750	80 - 89	22	15 9/16	15 11/32	10 1/32	3 5/8	5 1/8	2 3/4	110
11248888	200	3924	1000	92 - 102	24	16 15/16	17 5/16	11 1/32	4 1/8	5 23/32	3 5/32	143
11268888	250	4906	1250	104 - 114	26	17 23/32	18 1/2	11 7/32	4 23/32	6 3/32	3 9/16	168

Tolerance: Forged parts ± 5%

10-02-2016

FIBRE ROPE THIMBLE

TYPE K3

Material : Mild steel
Finish : Galvanized
Temperature range : -20°C up to +200°C
Standard certification : Certificate of Conformity

Suitable for fibre rope
Non-standard sizes or custom products available on request

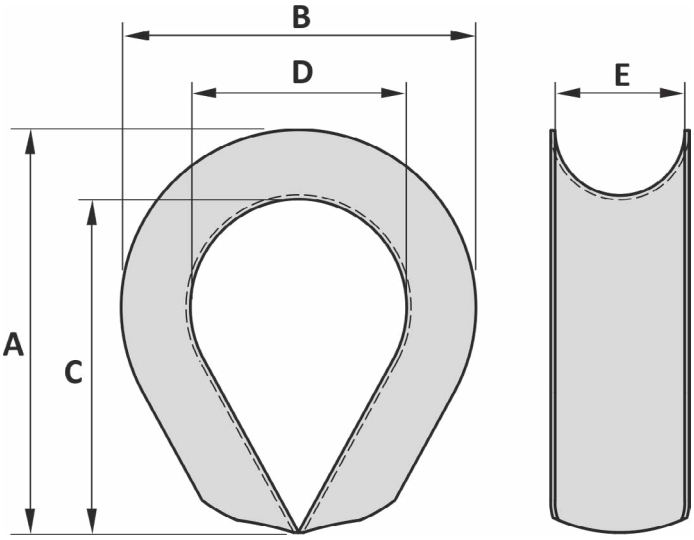

Art. No.	A inch	B mm	C mm	D mm	E mm	Packing	Weight kg/100
12022500	2 ¼	47	42	26	16	25	8.2
12025000	2 ½	55	48	32	18	25	14
12030000	3	64	58	38	20	25	25
12040000	4	75	78	50	32	25	50
12050000	5	110	95	65	40	25	80
12060000	6	120	115	75	48	10	90
12070000	7	140	140	85	56	10	180
12080000	8	160	160	105	64		310
12090000	9	180	175	110	72		530
12100000	10	200	190	120	80		650
12110000	11	220	210	145	88		900
12120000	12	245	230	150	102		1200
12140000	14	300	290	170	115		1800
12160000	16	320	310	185	130		2450
12180000	18	350	340	205	150		3200

Tolerance: Forged parts ± 5%

Art. No.	A inch	B inch	C inch	D inch	E inch	Packing	Weight lbs/100
12022500	2 ¼	1 27/32	1 21/32	1 1/32	5/8	25	18
12025000	2 ½	2 5/32	1 7/8	1 ¼	23/32	25	31
12030000	3	2 ½	2 9/32	1 ½	25/32	25	55
12040000	4	2 15/16	3 1/16	1 31/32	1 ¼	25	110
12050000	5	4 5/16	3 ¾	2 9/16	1 9/16	25	176
12060000	6	4 23/32	4 17/32	2 15/16	1 7/8	10	198
12070000	7	5 ½	5 ½	3 11/32	2 3/16	10	397
12080000	8	6 5/16	6 5/16	4 ⅛	2 ½		683
12090000	9	7 3/32	6 7/8	4 5/16	2 27/32		1168
12100000	10	7 7/8	7 15/32	4 23/32	3 5/32		1433
12110000	11	8 21/32	8 ¼	5 23/32	3 15/32		1984
12120000	12	9 21/32	9 1/16	5 29/32	4		2646
12140000	14	11 13/16	11 13/32	6 11/16	4 17/32		3968
12160000	16	12 19/32	12 3/16	7 9/32	5 ⅛		5401
12180000	18	13 25/32	13 ⅜	8 1/16	5 29/32		7055

Tolerance: Forged parts ± 5%

03-09-2014

FIBRE ROPE THIMBLE REINFORCED TYPE K3-B

Material : Mild steel
Finish : Galvanized
Temperature range : -20°C up to +200°C
Standard certification : Certificate of Conformity

Suitable for fibre rope
Non-standard sizes or custom products available on request

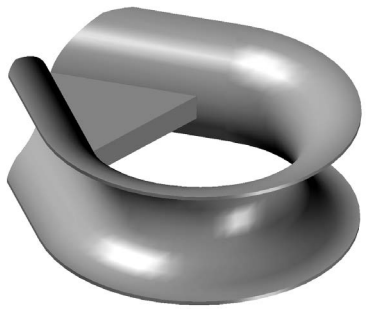

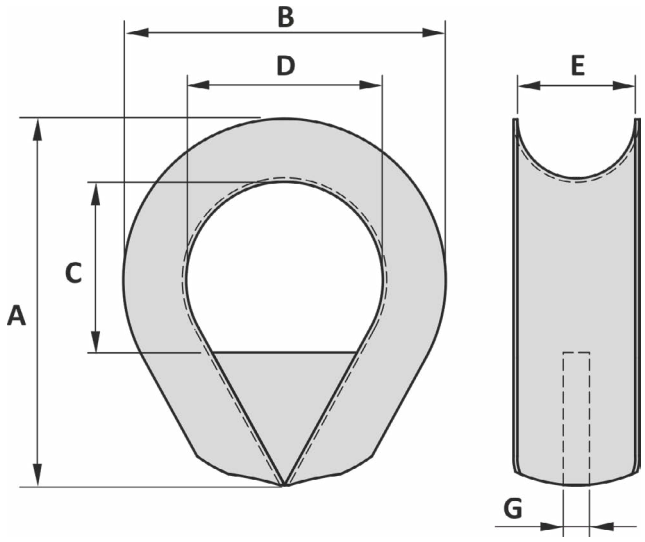

Art. No.	A inch	B mm	C mm	D mm	E mm	G mm	Packing	Weight kg/100
12059999	5	110	50	65	40	10	10	80
12069999	6	120	65	75	48	10	10	130
12079999	7	140	90	85	56	10	10	190
12089999	8	160	95	105	64	10		340
12099999	9	180	100	110	72	10		580
12109999	10	200	115	120	80	10		690
12119999	11	220	135	145	88	15		850
12129999	12	245	135	150	102	15		1350
12149999	14	300	135	170	115	15		1950
12169999	16	320	150	185	130	20		2650
12189999	18	350	200	205	150	20		3450

Tolerance: Forged parts ± 5%

Art. No.	A inch	B inch	C inch	D inch	E inch	G inch	Packing	Weight lbs/100
12059999	5	4 5/16	1 31/32	2 9/16	1 9/16	3/8	10	176
12069999	6	4 23/32	2 9/16	2 15/16	1 7/8	3/8	10	287
12079999	7	5 1/2	3 9/16	3 11/32	2 3/16	3/8	10	419
12089999	8	6 5/16	3 3/4	4 1/8	2 1/2	3/8		750
12099999	9	7 3/32	3 15/16	4 5/16	2 27/32	3/8		1279
12109999	10	7 7/8	4 17/32	4 23/32	3 5/32	3/8		1521
12119999	11	8 21/32	5 5/16	5 23/32	3 15/32	19/32		1874
12129999	12	9 21/32	5 5/16	5 29/32	4	19/32		2976
12149999	14	11 13/16	5 5/16	6 11/16	4 17/32	19/32		4299
12169999	16	12 19/32	5 29/32	7 9/32	5 1/8	25/32		5842
12189999	18	13 25/32	7 7/8	8 1/16	5 29/32	25/32		7606

Tolerance: Forged parts ± 5%

19-08-2013

EGG SHAPED THIMBLE / ROUND THIMBLE TYPE K4

Material : Mild steel
Finish : Galvanized
Temperature range : -20°C up to +200°C
Standard certification : Certificate of Conformity

Suitable for wire or fibre rope

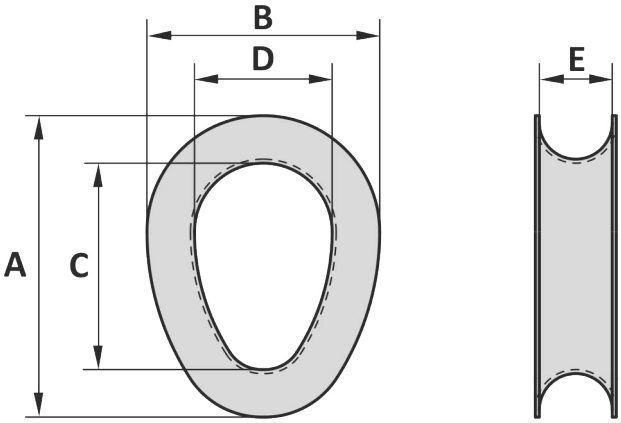

Art. No.	A inch	B mm	C mm	D mm	E mm	Packing	Weight kg/100
13030000	3	61	47	34	18	25	18
13035000	3 ½	70	60	39	21	25	28
13040000	4	93	72	54	24	25	45
13045000	4 ½	97	80	55	27	25	55
13050000	5	100	90	60	30	25	60
13060000	6	115	102	68	36	10	73
13080000	8	160	140	100	38	10	160

Tolerance: Forged parts ± 5%

Art. No.	A inch	B inch	C inch	D inch	E inch	Packing	Weight lbs/100
13030000	3	2 13/32	1 27/32	1 11/32	23/32	25	40
13035000	3 ½	2 ¾	2 ⅜	1 17/32	13/16	25	62
13040000	4	3 21/32	2 27/32	2 ⅛	15/16	25	99
13045000	4 ½	3 13/16	3 5/32	2 5/32	1 1/16	25	121
13050000	5	3 15/16	3 9/16	2 ⅜	1 3/16	25	132
13060000	6	4 17/32	4	2 11/16	1 13/32	10	161
13080000	8	6 5/16	5 ½	3 15/16	1 ½	10	353

Tolerance: Forged parts ± 5%

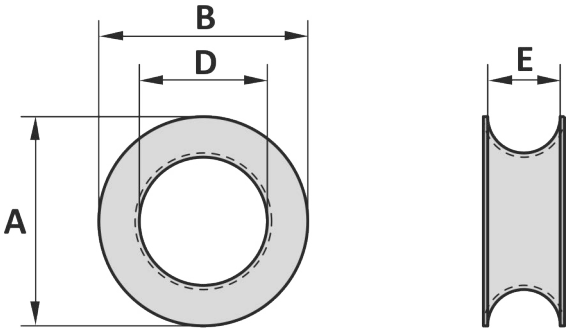

Art. No.	A inch	B mm	D mm	E mm	Packing	Weight kg/100
13102500	2 ½	68	41	21	25	21
13103000	3	72	48	26	25	28
13103500	3 ½	98	60	34	25	32

Tolerance: Forged parts ± 5%

Art. No.	A inch	B inch	D inch	E inch	Packing	Weight lbs/100
13102500	2 ½	2 11/16	1 ⅝	13/16	25	46
13103000	3	2 27/32	1 ⅞	1 1/32	25	62
13103500	3 ½	3 ⅞	2 ⅜	1 11/32	25	71

Tolerance: Forged parts ± 5%

27-08-2014

CONTAINER THIMBLE EGG SHAPED & ROUND TYPE K4

Material : Mild steel
Finish : Self colored/Galvanized
Temperature range : -20°C up to +200°C
Standard certification : Certificate of Conformity

Suitable for wire or fibre rope

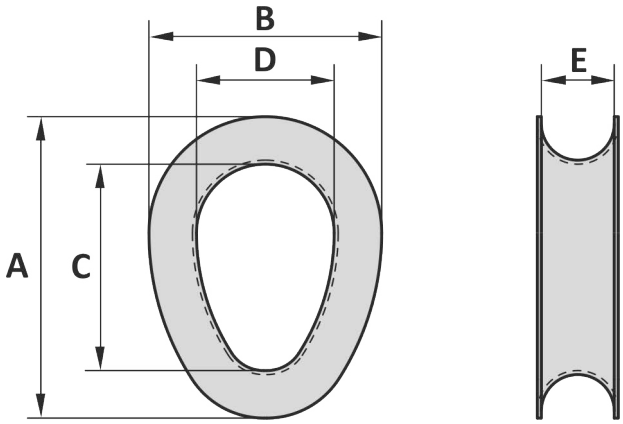

Art. No.	A inch	B mm	C mm	D mm	E mm	Finish	Packing	Weight kg/100
13800000	4	93	72	54	18	Self colored	25	45
13900000	4	93	72	54	18	Galvanized	25	45

Tolerance: Forged parts ± 5%

Art. No.	A inch	B inch	C inch	D inch	E inch	Finish	Packing	Weight lbs/100
13800000	4	3 21/32	2 27/32	2 1/8	23/32	Self colored	25	99
13900000	4	3 21/32	2 27/32	2 1/8	23/32	Galvanized	25	99

Tolerance: Forged parts ± 5%

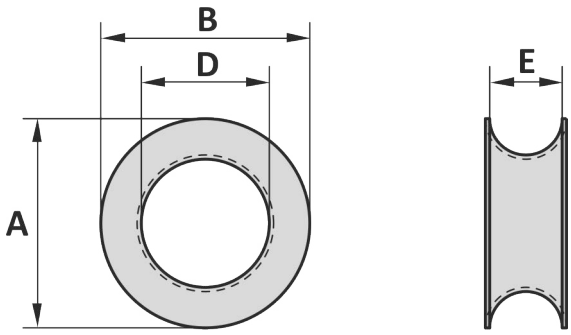

Art. No.	A inch	B mm	D mm	E mm	Finish	Packing	Weight kg/100
13880000	3 1/4	81	50	18	Self colored	25	45
13980000	3 1/4	81	50	18	Galvanized	25	45

Tolerance: Forged parts ± 5%

Art. No.	A inch	B inch	D inch	E inch	Finish	Packing	Weight lbs/100
13880000	3 1/4	3 3/16	1 31/32	23/32	Self colored	25	99
13980000	3 1/4	4 15/16	1 31/32	23/32	Galvanized	25	99

Tolerance: Forged parts ± 5%

01-07-2011

SOLID THIMBLE

TYPE K5

Material : Cast steel
Finish : Self colored
Temperature range : -20°C up to +200°C
Standard certification : Certificate of Conformity

Suitable for wire rope
Special holes for fittings or holes with (bronze) bushes on request

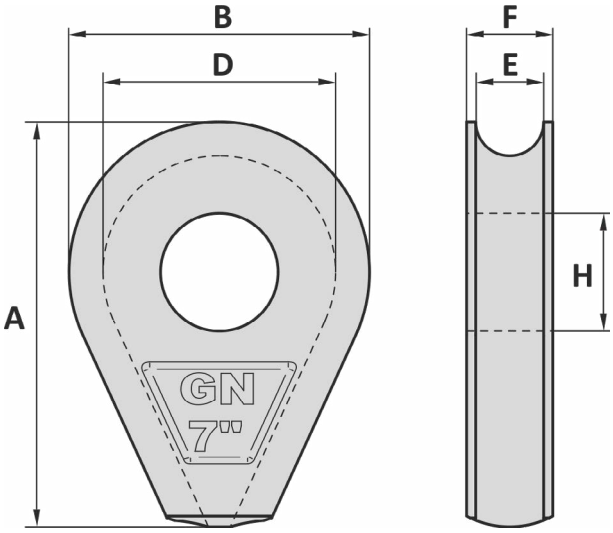

For the correct article number fill in the hole diameter in mm on the grey and underscored numbers

Art. No.	Size inch	Rope size mm	A mm	B mm	D mm	E mm	F mm	H mm	H max mm	Weight kg
16020000	2	7 - 8	66	40	31	9	15	14	20	0.16
16027500	2 ½	9 - 10	82	50	38	11	18	18	25	0.29
16030000	3	11 - 12	98	60	45	13	20	21	30	0.46
16035000	3 ½	13 - 15	114	70	53	16	24	25	35	0.72
16040400	4	16 - 18	110	75	58	19	26	30 / 38 / 40	45	0.79
16050450	5	19 - 22	130	92	65	23	30	30 / 40 / 45	50	1.3
16060550	6	23 - 25	150	110	82	26	33	30 / 40 / 45 / 55	60	2.1
16070600	7	26 - 30	180	127	96	32	40	30 / 40 / 52 / 60	70	3.6
16080700	8	31 - 34	200	140	100	35	43	30 / 42 / 55 / 70	80	4.4
16090100	9	35 - 38	225	160	122	39	47	50 / 70 / 90 / 100	100	6.2
16100100	10	39 - 42	250	170	127	43	57	50 / 70 / 90 / 100	105	9.1
16120105	12	43 - 49	305	210	160	54	69	60 / 80 / 105	120	17
16140110	14	50 - 57	355	240	181	61	80	75 / 110	140	26
16170122	17	58 - 65	431	290	230	68	92	85 / 122	160	46
16230130	24	66 - 76	597	387	310	88	114	130	200	101

Tolerance: ± 5%

Art. No.	Size inch	Rope size inch	A inch	B inch	D inch	E inch	F inch	H inch	H max inch	Weight lbs
16020000	2	¼	2 19/32	1 9/16	1 7/32	11/32	19/32	9/16	25/32	0.35
16027500	2 ½	⅜	3 7/32	1 31/32	1 ½	7/16	23/32	23/32	1	0.64
16030000	3	½	3 ⅞	2 ⅜	1 25/32	½	25/32	13/16	1 3/16	1.0
16035000	3 ½	⅝	4 ½	2 ¾	2 3/32	⅝	15/16	1	1 ⅜	1.6
16040400	4	¾	4 5/16	2 15/16	2 9/32	¾	1 1/32	1 3/16 / 1 ½ / 1 9/16	1 25/32	1.7
16050450	5	⅞	5 ⅛	3 ⅝	2 9/16	29/32	1 3/16	1 3/16 / 1 9/16 / 1 25/32	1 31/32	2.9
16060550	6	1	5 29/32	4 5/16	3 7/32	1 1/32	1 5/16	1 3/16 / 1 9/16 / 1 25/32 / 2 25/32	2 ⅜	4.6
16070600	7	1 ⅛ - 1 ¼	7 3/32	5	3 25/32	1 ¼	1 9/16	1 3/16 / 1 9/16 / 2 1/16 / 2 ⅜	2 ¾	7.9
16080700	8	1 ¼ - 1 ⅜	7 ⅞	5 ½	3 15/16	1 ⅜	1 11/16	1 3/16 / 1 21/32 / 2 5/32 / 2 ¾	3 5/32	9.7
16090100	9	1 ⅜ - 1 ½	8 ⅞	6 5/16	4 13/16	1 17/32	1 27/32	1 31/32 / 2 ¾ / 3 9/16 / 3 15/16	3 15/16	14
16100100	10	1 ½ - 1 ¾	9 27/32	6 11/16	5	1 11/16	2 ¼	1 31/32 / 2 ¾ / 3 17/32 / 3 15/16	4 ⅛	20
16120105	12	1 ¾ - 2	12	8 ¼	6 5/16	2 ⅛	2 23/32	2 ⅜ / 3 5/32 / 4 ⅛	4 23/32	37
16140110	14	2 - 2 ¼	13 31/32	9 7/16	7 ⅛	2 13/32	3 5/32	2 15/16 / 4 5/16	5 ½	57
16170122	17	2 ¼ - 2 ½	16 31/32	11 13/32	9 1/16	2 11/16	3 ⅝	3 11/32 / 4 13/16	6 5/16	101
16230130	24	2 ½ - 3	23 ½	15 ¼	12 3/16	3 15/32	4 ½	5 ⅛	7 ⅞	223

Tolerance: ± 5%

10-06-2014

Material : Thimble: Mild steel
Link: Alloy steel
Finish : Painted
Temperature range : -4°F up to +392°F
Standard certification : Certificate of Conformity

Suitable for fibre rope
Special link or thimble on request

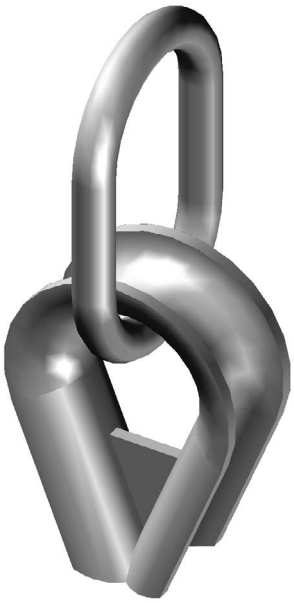

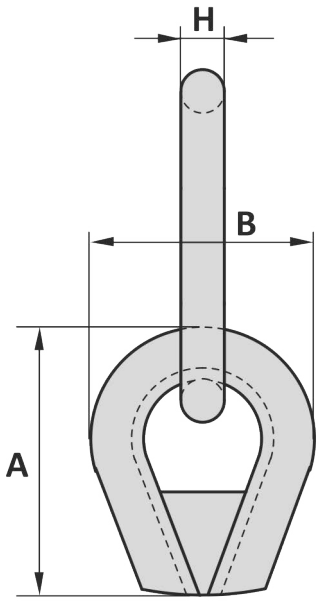

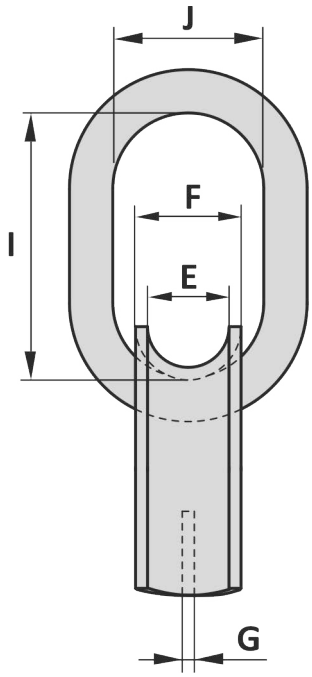

Art. No.	Rope size inch	MBL link ton	A inch	B inch	E inch	F inch	G inch	H inch	J inch	I inch	Weight lbs
17090045	9 - 10 ½	104	15 5/32	11 13/16	3 15/16	5 1/8	25/32	1 25/32	13 3/8	7 3/32	77
17090051	9 - 10 ½	144	15 5/32	11 13/16	3 15/16	5 1/8	25/32	2	13 25/32	7 15/32	86
17090057	9 - 10 ½	188	15 5/32	11 13/16	3 15/16	5 1/8	25/32	2 1/4	15 3/4	7 7/8	101
17090063	9 - 10 ½	232	15 5/32	11 13/16	3 15/16	5 1/8	25/32	2 15/32	16 15/16	8 21/32	119
17125057	12 ½ - 13	188	18 ½	12 19/32	4 17/32	6 3/32	25/32	2 1/4	15 3/4	7 7/8	123
17125063	12 ½ - 13	232	18 ½	12 19/32	4 17/32	6 3/32	25/32	2 15/32	16 15/16	8 21/32	141
17125072	12 ½ - 13	336	18 ½	12 19/32	4 17/32	6 3/32	25/32	2 27/32	18 1/8	9 27/32	170
17125080	12 ½ - 13	420	18 ½	12 19/32	4 17/32	6 3/32	25/32	3 5/32	17 23/32	9 27/32	194
17140063	14 - 15	232	22 1/16	15 11/32	5 5/16	6 7/8	1 3/16	2 15/32	16 15/16	8 21/32	172
17140072	14 - 15	336	22 1/16	15 11/32	5 5/16	6 7/8	1 3/16	2 27/32	18 1/8	9 27/32	201
17140080	14 - 15	420	22 1/16	15 11/32	5 5/16	6 7/8	1 3/16	3 5/32	17 23/32	9 27/32	225
17160072	16 - 18	336	22 1/16	15 11/32	6 3/32	7 11/16	1 3/16	2 27/32	18 1/8	9 27/32	205
17160080	16 - 18	420	22 1/16	15 11/32	6 3/32	7 11/16	1 3/16	3 5/32	17 23/32	9 27/32	229
17160090	16 - 18	524	22 1/16	15 11/32	6 3/32	7 11/16	1 3/16	2 27/32	18 1/8	11 13/16	276
17190080	19 - 20	420	23 5/8	17 23/32	7 3/32	8 21/32	1 3/16	3 5/32	17 23/32	9 27/32	256
17190090	19 - 20	524	23 5/8	17 23/32	7 3/32	8 21/32	1 3/16	3 9/16	18 1/8	11 13/16	302
17190100	19 - 20	628	23 5/8	17 23/32	7 3/32	8 21/32	1 3/16	3 5/32	19 11/16	11 13/16	355
17210090	20 - 21	524	24 13/32	18 29/32	8 1/16	9 21/32	1 3/16	3 9/16	18 1/8	11 13/16	326
17210100	20 - 21	628	24 13/32	18 29/32	8 1/16	9 21/32	1 3/16	3 15/16	19 11/16	11 13/16	379
17210115	20 - 21	1000	24 13/32	18 29/32	8 1/16	9 21/32	1 3/16	4 17/32	23 5/8	15 3/4	516

Tolerance: ± 5%

28-11-2017

THIMBLE WITH LINK

TYPE K10

Material : Thimble: Mild steel
Link: Alloy steel
Finish : Painted
Temperature range : -20°C up to +200°C
Standard certification : Certificate of Conformity

Suitable for fibre rope
Special link or thimble on request

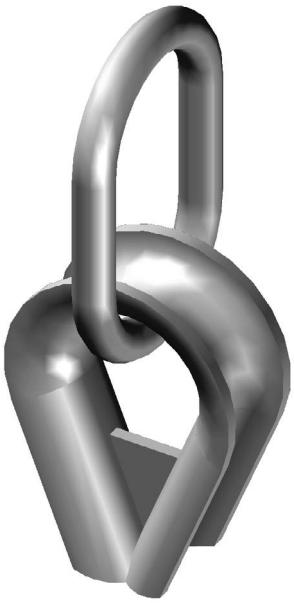

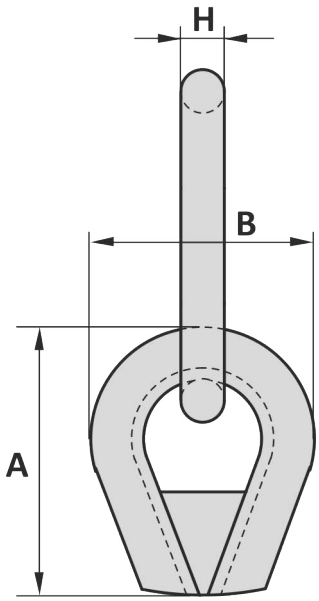

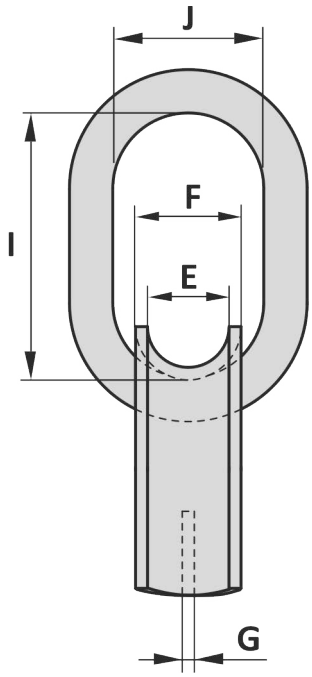

Art. No.	Rope size	MBL link	A	B	E	F	G	H	I	J	Weight
	inch	ton	mm	mm	mm	mm	mm	mm	mm	mm	kg
17090045	9 - 10 ½	104	385	300	100	130	20	45	340	180	35
17090051	9 - 10 ½	144	385	300	100	130	20	51	350	190	39
17090057	9 - 10 ½	188	385	300	100	130	20	57	400	200	46
17090063	9 - 10 ½	232	385	300	100	130	20	63	430	220	54
17125057	12 ½ - 13	188	470	320	115	155	20	57	400	200	56
17125063	12 ½ - 13	232	470	320	115	155	20	63	430	220	64
17125072	12 ½ - 13	336	470	320	115	155	20	72	460	250	77
17125080	12 ½ - 13	420	470	320	115	155	20	80	450	250	88
17140063	14 - 15	232	560	390	135	175	30	63	430	220	78
17140072	14 - 15	336	560	390	135	175	30	72	460	250	91
17140080	14 - 15	420	560	390	135	175	30	80	450	250	102
17160072	16 - 18	336	560	390	155	195	30	72	460	250	93
17160080	16 - 18	420	560	390	155	195	30	80	450	250	104
17160090	16 - 18	524	560	390	155	195	30	90	460	300	125
17190080	19 - 20	420	600	450	180	220	30	80	450	250	116
17190090	19 - 20	524	600	450	180	220	30	90	460	300	137
17190100	19 - 20	628	600	450	180	220	30	100	500	300	161
17210090	20 - 21	524	620	480	205	245	30	90	460	300	148
17210100	20 - 21	628	620	480	205	245	30	100	500	300	172
17210115	20 - 21	1000	620	480	205	245	30	115	600	400	234

Tolerance: ± 5%

28-11-2017

Material : Mild steel
Finish : Galvanized
Temperature range : -20°C up to +200°C
Standard certification : Certificate of Conformity

Suitable for fibre rope
Dimension E limited adjustable

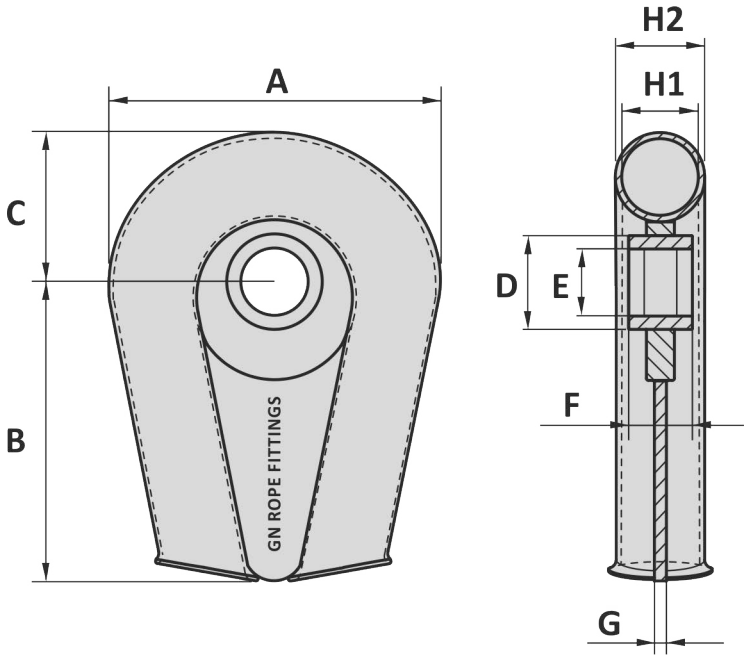

Art. No.	Rope size inch	A mm	B mm	C mm	D mm	E mm	F mm	G mm	H1 mm	H2 mm	Weight kg
18000600	6	254	200	126	-	60	-	30	64	70	7.8
18000800	8	318	250	158	-	80	-	40	82	89	15
18001001	10	419	360	210	190	132	105	15	107	114	28
18001200	12	521	416	250	194	144	130	20	132	140	46
18001500	15	625	539	282	194	144	150	25	159	168	74
18001800	18	734	640	336	219	169	175	30	183	194	126
18002100	21	829	780	374	219	169	200	30	207	219	176
18002400	24	924	915	421	273	201	225	40	232	245	272
18002700	27	1035	1060	477	273	201	250	50	260	273	400

Tolerance: ± 5%

Art. No.	Rope size inch	A inch	B inch	C inch	D inch	E inch	F inch	G inch	H1 inch	H2 inch	Weight lbs
18000600	6	10	7 7/8	4 31/32	-	2 3/8	-	1 3/16	2 1/2	2 3/4	17
18000800	8	12 1/2	9 27/32	6 7/32	-	3 5/32	-	1 9/16	3 7/32	3 1/2	33
18001001	10	16 1/2	14 3/16	8 1/4	7 15/32	5 3/16	4 1/8	19/32	4 7/32	4 1/2	62
18001200	12	20 1/2	16 3/8	9 27/32	7 5/8	5 11/16	5 1/8	25/32	5 3/16	5 1/2	101
18001500	15	24 5/8	21 7/32	11 3/32	7 5/8	5 11/16	5 29/32	1	6 1/4	6 5/8	163
18001800	18	28 29/32	25 3/16	13 7/32	8 5/8	6 21/32	6 7/8	1 3/16	7 3/16	7 5/8	278
18002100	21	32 5/8	30 23/32	14 23/32	8 5/8	6 21/32	7 7/8	1 3/16	8 5/32	8 5/8	388
18002400	24	36 3/8	36 1/32	16 9/16	10 3/4	7 29/32	8 7/8	1 9/16	9 1/8	9 21/32	600
18002700	27	40 3/4	41 3/4	18 25/32	10 3/4	7 29/32	9 27/32	1 31/32	10 1/4	10 3/4	882

Tolerance: ± 5%

01-07-2011

TUBULAR THIMBLE WITH LINK

TYPE K12

Material	:	Thimble: Mild steel Link: Alloy steel
Finish	:	Painted
Temperature range	:	-4°F up to +392°F
Standard certification	:	Certificate of Conformity

Suitable for fibre rope
Special link or thimble on request

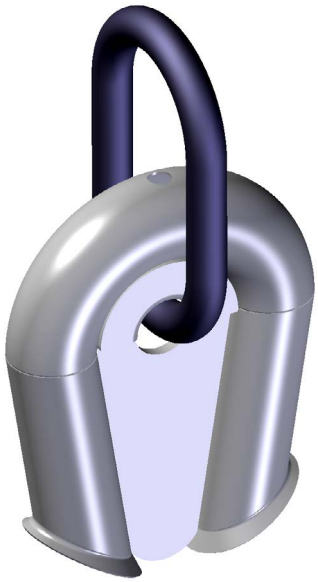

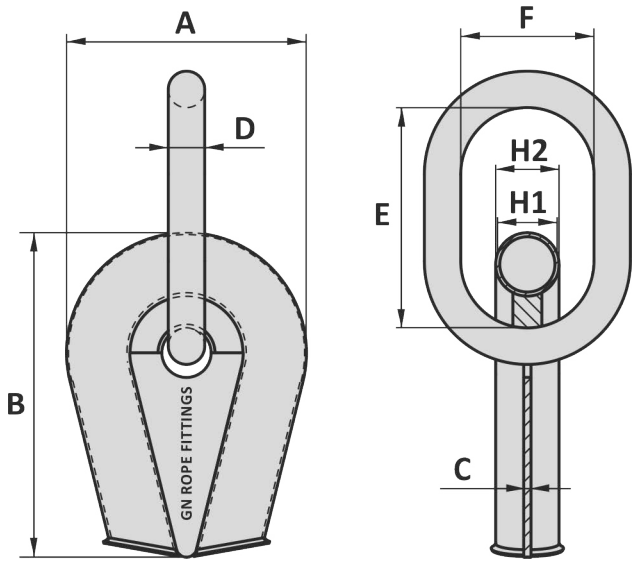

Art. No.	Rope size inch	MBL link ton	A inch	B inch	C inch	H1 inch	H2 inch	D inch	E inch	F inch	Weight lbs
18000632	6	40	10	12 3/16	25/32	2 1/2	2 3/4	1 1/4	7 7/8	4 5/16	26
18000636	6	64	10	12 3/16	25/32	2 1/2	2 3/4	1 13/32	10 1/4	5 1/2	31
18000645	6	104	10	12 3/16	25/32	2 1/2	2 3/4	1 25/32	13 3/8	7 3/32	46
18000836	8	64	12 1/2	16 1/8	1 3/16	3 7/32	3 1/2	1 13/32	10 1/4	5 1/2	49
18000845	8	104	12 1/2	16 1/8	1 3/16	3 7/32	3 1/2	1 25/32	13 3/8	7 3/32	64
18000851	8	144	12 1/2	16 1/8	1 3/16	3 7/32	3 1/2	2	13 25/32	7 15/32	73
18001045	10	104	16 1/2	22 7/16	25/32	4 7/32	4 1/2	1 25/32	13 3/8	7 3/32	90
18001051	10	144	16 1/2	22 7/16	25/32	4 7/32	4 1/2	2	13 25/32	7 15/32	99
18001057	10	188	16 1/2	22 7/16	25/32	4 7/32	4 1/2	2 1/4	15 3/4	7 7/8	115
18001263	12	232	20 1/2	26 25/32	25/32	5 3/16	5 1/2	2 15/32	16 15/16	9 1/16	152
18001272	12	336	20 1/2	26 25/32	25/32	5 3/16	5 1/2	2 27/32	17 5/16	9 27/32	181
18001280	12	420	20 1/2	26 25/32	25/32	5 3/16	5 1/2	3 5/32	17 23/32	9 27/32	205
18001572	15	336	24 5/8	32 3/8	1	6 1/4	6 5/8	2 27/32	17 5/16	9 27/32	262
18001580	15	420	24 5/8	32 3/8	1	6 1/4	6 5/8	3 5/32	17 23/32	9 27/32	287
18001590	15	524	24 5/8	32 3/8	1	6 1/4	6 5/8	3 9/16	18 1/8	11 13/16	333
18001880	18	420	28 29/32	38 1/2	1 3/16	7 3/16	7 5/8	3 5/32	17 23/32	9 27/32	401
18001890	18	524	28 29/32	38 1/2	1 3/16	7 3/16	7 5/8	3 9/16	18 1/8	11 13/16	448
18001810	18	628	28 29/32	38 1/2	1 3/16	7 3/16	7 5/8	3 15/16	19 11/16	11 13/16	500
18002190	21	524	32 5/8	45 15/32	1 3/16	8 5/32	8 5/8	3 9/16	18 1/8	11 13/16	558
18002110	21	628	32 5/8	45 15/32	1 3/16	8 5/32	8 5/8	3 15/16	19 11/16	11 13/16	611
18002112	21	1000	32 5/8	45 15/32	1 3/16	8 5/32	8 5/8	4 17/32	23 5/8	15 3/4	747
18002410	24	628	36 3/8	52 15/16	1 9/16	9 1/8	9 21/32	3 15/16	19 11/16	11 13/16	822
18002412	24	1000	36 3/8	52 15/16	1 9/16	9 1/8	9 21/32	4 17/32	23 5/8	15 3/4	959

Tolerance: ± 5%, machined parts ± 1/32 inch

30-05-2016

Material : Thimble: Mild steel
Link: Alloy steel
Finish : Painted
Temperature range : -20°C up to +200°C
Standard certification : Certificate of Conformity

Suitable for fibre rope
Special link or thimble on request

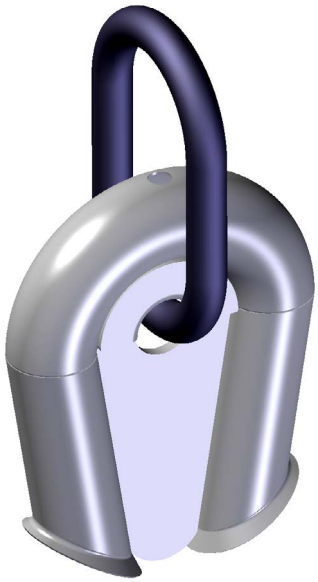

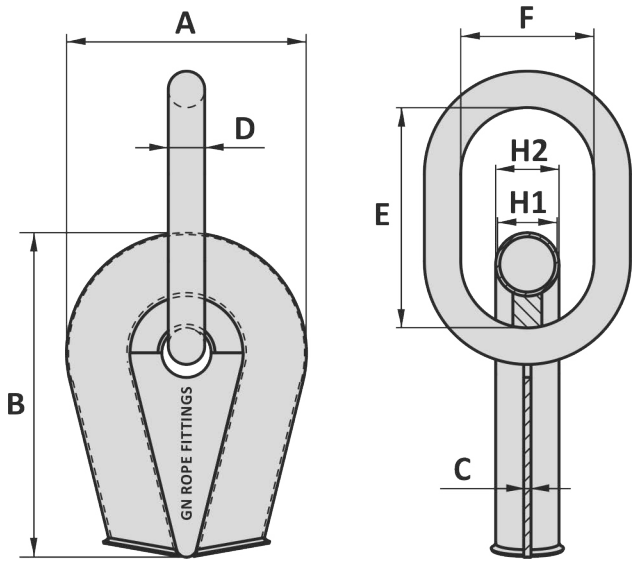

Art. No.	Rope size inch	MBL link ton	A mm	B mm	C mm	H1 mm	H2 mm	D mm	E mm	F mm	Weight kg
18000632	6	40	254	310	20	64	70	32	200	110	12
18000636	6	64	254	310	20	64	70	36	260	140	14
18000645	6	104	254	310	20	64	70	45	340	180	21
18000836	8	64	318	410	30	82	89	36	260	140	22
18000845	8	104	318	410	30	82	89	45	340	180	29
18000851	8	144	318	410	30	82	89	51	350	190	33
18001045	10	104	419	570	20	107	114	45	340	180	41
18001051	10	144	419	570	20	107	114	51	350	190	45
18001057	10	188	419	570	20	107	114	57	400	200	52
18001263	12	232	521	680	20	132	140	63	430	230	69
18001272	12	336	521	680	20	132	140	72	440	250	82
18001280	12	420	521	680	20	132	140	80	450	250	93
18001572	15	336	625	822	25	159	168	72	440	250	119
18001580	15	420	625	822	25	159	168	80	450	250	130
18001590	15	524	625	822	25	159	168	90	460	300	151
18001880	18	420	734	978	30	183	194	80	450	250	182
18001890	18	524	734	978	30	183	194	90	460	300	203
18001810	18	628	734	978	30	183	194	100	500	300	227
18002190	21	524	829	1155	30	207	219	90	460	300	253
18002110	21	628	829	1155	30	207	219	100	500	300	277
18002112	21	1000	829	1155	30	207	219	115	600	400	339
18002410	24	628	924	1345	40	232	245	100	500	300	373
18002412	24	1000	924	1345	40	232	245	115	600	400	435

Tolerance: ± 5%, machined parts ± 1 mm

30-05-2016

BELLMOUTH THIMBLE

TYPE K13

Material : Mild steel
Stainless steel
(Spools can be supplied in galvanized or stainless steel)
Finish : Galvanized (mild steel)
Self colored (stainless steel)
Temperature range : -20°C up to +200°C
Standard certification : Certificate of Conformity

Suitable for fibre rope
For connecting to a special shackle we can change dimension K on request

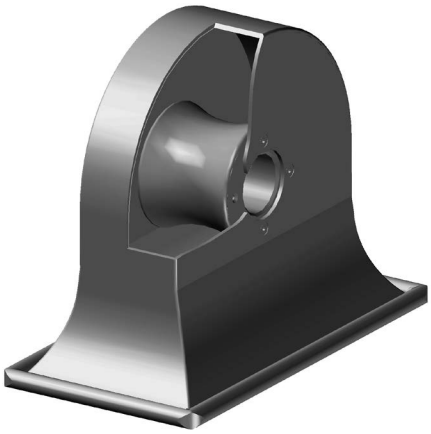

Standard type

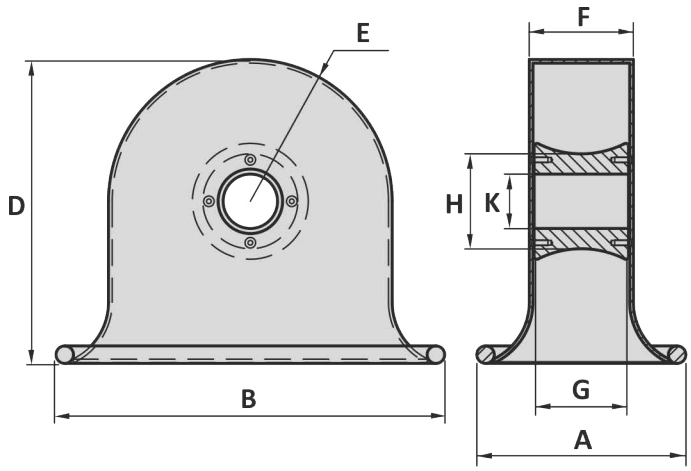

Shell type

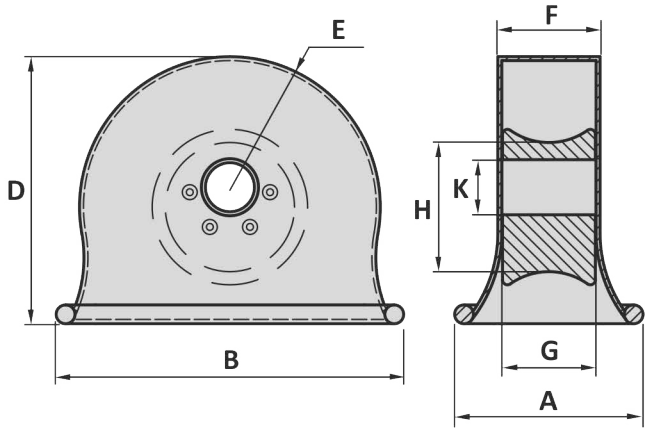

Art. No. galv.	Art. No. st. steel	Rope size inch	A mm	B mm	D mm	E mm	F mm	K mm	H mm	G mm	Weight kg
18012009	18012005	10 - 12	400	640	480	195	166	86	175	147	75
18015009	18015005	15 - 16	440	746	608	248	193	105	196	172	110
18018009	18018005	18 - 21	454	844	660	300	228	118	204	205	135
18022009	18022005	22 - 24	450	1000	758	400	266	148	290	245	236
Special shell type											
18512009		10 - 12	380	560	515	240	206	111	195	187	93
18515009		15 - 16	380	700	538	303	206	111	260	187	141
18518009		18 - 21	454	844	668	358	226	131	320	207	169

Tolerance: ± 5%, machined parts ± 1 mm

Art. No. galv.	Art. No. st. steel	Rope size inch	A inch	B inch	D inch	E inch	F inch	K inch	H inch	G inch	Weight lbs
18012009	18012005	10 - 12	15 3/4	25 3/16	18 29/32	7 11/16	6 17/32	3 3/8	6 7/8	5 25/32	165
18015009	18015005	15 - 16	17 5/16	29 3/8	23 15/16	9 3/4	7 19/32	4 1/8	7 23/32	6 25/32	243
18018009	18018005	18 - 21	17 7/8	33 7/32	26	11 13/16	8 31/32	4 21/32	8 1/32	8 1/16	298
18022009	18022005	22 - 24	17 23/32	39 3/8	29 27/32	15 3/4	10 15/32	5 13/16	11 13/32	9 21/32	520
Special shell type											
18512009		10 - 12	14 31/32	22 1/16	20 9/32	9 7/16	8 1/8	4 3/8	7 11/16	7 3/8	205
18515009		15 - 16	14 31/32	27 9/16	21 3/16	11 15/16	8 1/8	4 3/8	10 1/4	7 3/8	311
18518009		18 - 21	17 7/8	33 7/32	26 5/16	14 3/32	8 29/32	5 5/32	12 19/32	8 5/32	373

Tolerance: ± 5%, machined parts ± 1/32 inch

08-06-2015

Material : Cast steel
Stainless steel
Finish : Galvanized (mild steel)
Self colored (stainless steel)
Temperature range : -20°C up to +200°C
Standard certification : Certificate of Conformity

Suitable for fibre rope
For connecting to a special shackle we can change dimension X and Y on request

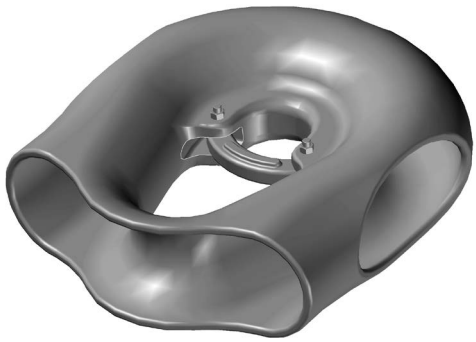

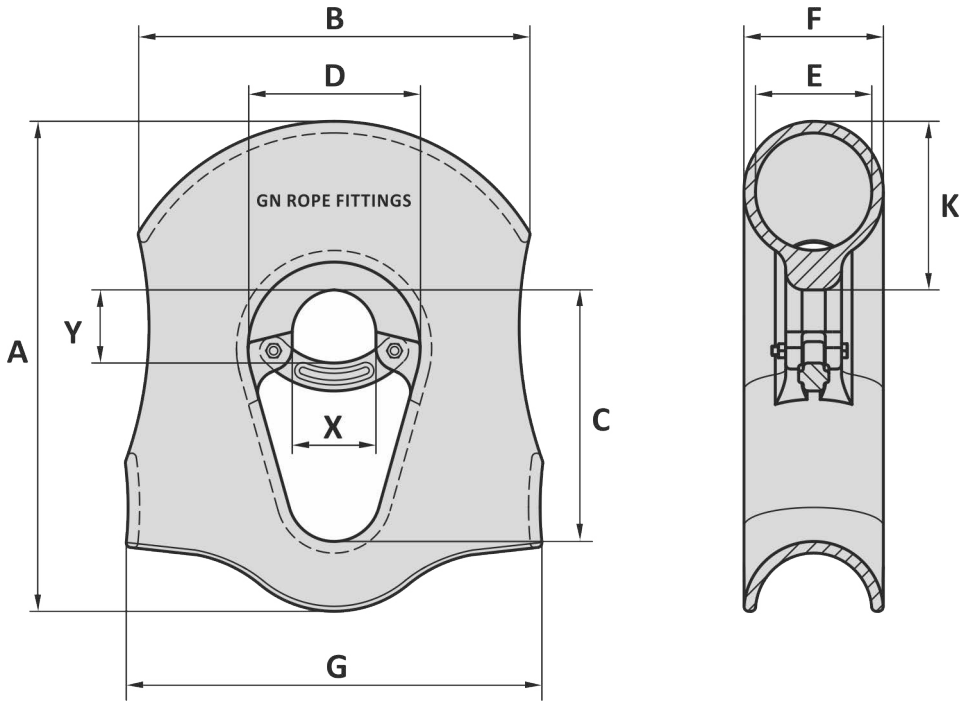

Art. No. steel	Art. No. st. steel	Rope size inch	A mm	B mm	C mm	D mm	E mm	F mm	G mm	K mm	X mm	Y mm	Weight kg
16001113	21001113	11 - 13	530	320	270	175	132	157	477	170	105	105	52
16001415	21001415	14 - 15	655	476	357	258	154	183	598	200	116	124	83
16001618	21001618	16 - 18	795	542	380	283	184	212	721	252	143	143	126
16001921	21001921	19 - 21	940	657	457	348	209	261	880	309	158	177	297
16002224	21002224	22 - 24	1043	814	575	410	244	298	867	360	180	200	406

Tolerance: Cast parts ± 5%, machined parts ± 1 mm

Art. No. steel	Art. No. st. steel	Rope size inch	A inch	B inch	C inch	D inch	E inch	F inch	G inch	K inch	X inch	Y inch	Weight lbs
16001113	21001113	11 - 13	20 7/8	12 19/32	10 5/8	6 7/8	5 3/16	6 3/16	18 25/32	6 11/16	4 1/8	4 1/8	115
16001415	21001415	14 - 15	25 25/32	18 3/4	14 1/16	10 5/32	6 1/16	7 3/16	23 9/16	7 7/8	4 9/16	4 7/8	183
16001618	21001618	16 - 18	31 5/16	21 11/32	14 31/32	11 1/8	7 1/4	8 11/32	28 3/8	9 15/16	5 5/8	5 5/8	278
16001921	21001921	19 - 21	37	25 7/8	18	13 11/16	8 7/32	10 9/32	34 21/32	12 5/32	6 7/32	6 31/32	655
16002224	21002224	22 - 24	41 1/16	32 1/16	22 5/8	16 1/8	9 5/8	11 3/4	34 1/8	14 3/16	7 3/32	7 7/8	895

Tolerance: Cast parts ± 5%, machined parts ± 1/32 inch

18-05-2018

FORGED ROULETTE THIMBLE

TYPE K17

Material	:	Alloy steel, Grade R3/R3S/R4/R4S High tensile steel
Finish	:	Painted or galvanized
Temperature range	:	-40°C up to +200°C, Polar Rated
Standard certification	:	Certificate of Conformity 3.1 material certificate EN 10204

to suit: **shackle - rope**
H- or Y-link - rope
plate connector - rope

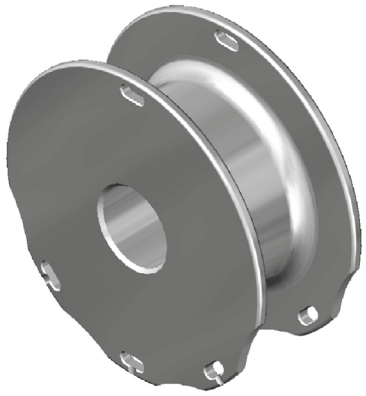

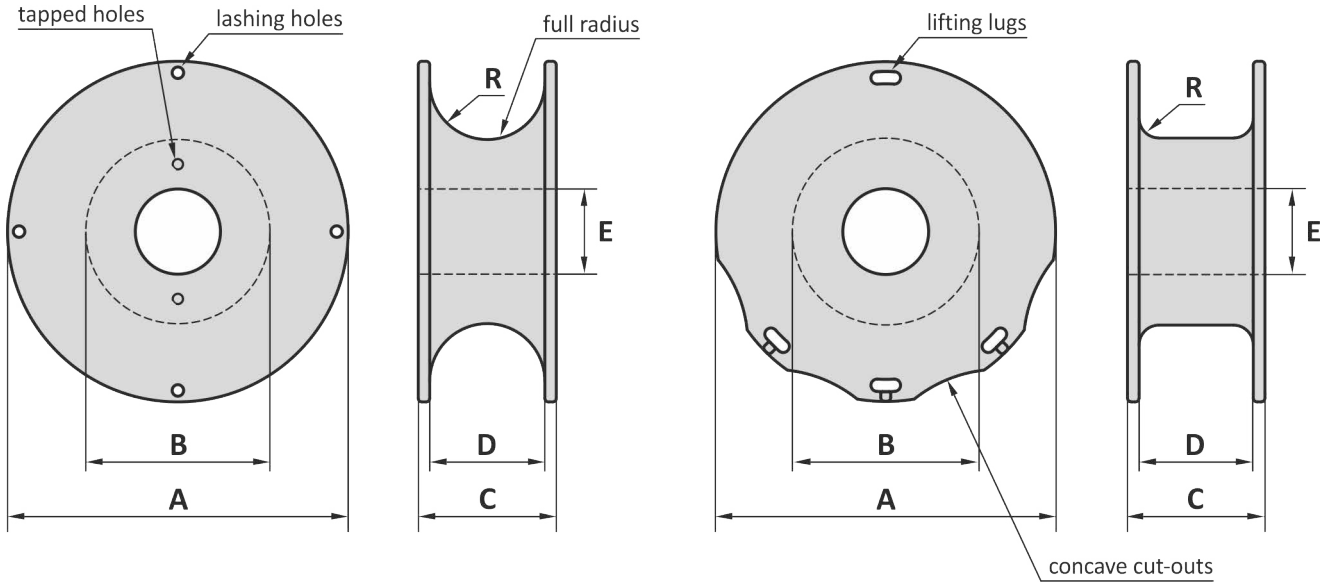

Dimensions on customer request

Available with: Lashing holes
Lifting lugs
Concave cut-outs
Full radius shape
Tapped holes (for lifting)
Orkot bush

Tolerance: Machined part ± 1 mm

14-10-2014

Material : Mild steel
Finish : Painted
Temperature range : -20°C up to +200°C
Standard certification : Certificate of Conformity
3.1 material certificate EN 10204

to suit: **shackle - rope**
H- or Y-link - rope
plate connector - rope

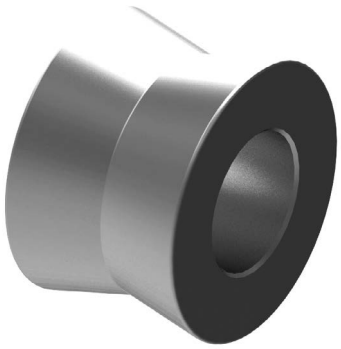

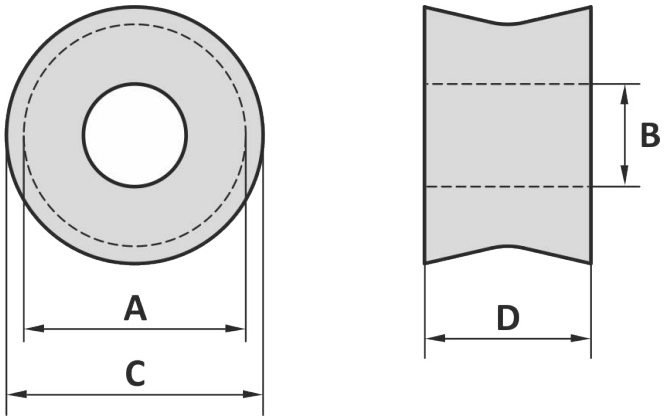

Art. No.	suitable shackle	A mm	B mm	C mm	D mm	Weight kg
31222401	H9 WLL 4,75 ton	55	26	75	30	0.59
31242701	H9 WLL 6,5 ton	55	29	75	34	0.68
31273001	H9 WLL 8,5 ton	55	32	75	38	0.69
31303601	H9 WLL 12 ton	60	38	90	45	1.0
31353901	H9 WLL 13,5 ton	60	41	90	50	1.1
18000017	H9 WLL 17 ton - H14 WLL 30 ton	87	48	100	57	2.3
18000025	H9 WLL 25 ton	104	55	120	69	4.0
18000035	H9 WLL 35 ton	122	60	140	79	6.6
18000040	H14 WLL 40 ton	122	55	140	79	6.9
18000054	H14 WLL 55 ton	129	60	150	90	8.8
18000055	H9 WLL 55 ton - H14 WLL 75 ton	137	75	160	100	10
18000085	H9 WLL 85 ton - H14 WLL 125 ton	152	88	180	122	15
18000120	H10 WLL 120 ton - H14 WLL 150 ton	168	100	200	140	20
18000150	H10 WLL 150 ton - H14 WLL 200 ton	185	112	220	150	26
18000200	H10 WLL 200 ton - H14 WLL 250 ton	211	133	250	170	37

Tolerance: Machined parts ± 1 mm

Art. No.	suitable shackle	A inch	B inch	C inch	D inch	Weight lbs
31222401	H9 WLL 4,75 ton	2 5/32	1 1/32	2 15/16	1 3/16	1.3
31242701	H9 WLL 6,5 ton	2 5/32	1 1/8	2 15/16	1 11/32	1.5
31273001	H9 WLL 8,5 ton	2 5/32	1 1/4	2 15/16	1 1/2	1.5
31303601	H9 WLL 12 ton	2 3/8	1 1/2	3 9/16	1 25/32	2.3
31353901	H9 WLL 13,5 ton	2 3/8	1 5/8	3 9/16	1 31/32	2.3
18000017	H9 WLL 17 ton - H14 WLL 30 ton	3 7/16	1 7/8	3 15/16	2 1/4	5.1
18000025	H9 WLL 25 ton	4 3/32	2 5/32	4 23/32	2 23/32	8.8
18000035	H9 WLL 35 ton	4 13/16	2 3/8	5 1/2	3 1/8	15
18000040	H14 WLL 40 ton	4 13/16	2 5/32	5 1/2	3 1/8	15
18000054	H14 WLL 55 ton	5 1/16	2 3/8	5 29/32	3 9/16	19
18000055	H9 WLL 55 ton - H14 WLL 75 ton	5 3/8	2 15/16	6 5/16	3 15/16	22
18000085	H9 WLL 85 ton - H14 WLL 125 ton	6	3 15/32	7 3/32	4 13/16	33
18000120	H10 WLL 120 ton - H14 WLL 150 ton	6 5/8	3 15/16	7 7/8	5 1/2	44
18000150	H10 WLL 150 ton - H14 WLL 200 ton	7 9/32	4 13/32	8 21/32	5 29/32	57
18000200	H10 WLL 200 ton - H14 WLL 250 ton	8 5/16	5 1/4	9 27/32	6 11/16	82

Tolerance: Machined part ± 1/32 inch

13-06-2018

NOTES

S01
Closed spelter socket

S02
Open spelter socket

S03
Open wedge socket

S04
CR socket

S05
PMS /LTM forged socket

S06
CR-D socket

S012
Stopper socket

Application information

Sockets attached to steel wire rope, used for lifting, anchoring system, anchor cables of oil platforms, towing cables or for fastening cables in construction purposes such as bridges, roof construction etc.
Sockets are the strongest steel wire rope end fitting available, and if they are assembled in the proper way they can meet at least the breaking strength of the steel wire rope.

Spelter sockets open, closed and wedge, SO1, SO2 and SO3 are used for lifting, rigging, towing and constructions. CR and CRD sockets, SO4 and SO6 are used in anchor lines for temporary and long term mooring between the chain and wire rope.

Wire dia mm	Wire dia inch	Approximate resin volume cc	Approximate resin volume ci
6 - 7	¼	10	0.61
8 - 10	⅜	20	1.2
11 - 13	½	30	1.8
14 - 16	⅝	50	3.1
17 - 19	¾	80	4.9
20 - 22	⅞	100	6.1
23 - 26	1	170	10
27 - 30	1 ⅛	250	15
31 - 36	1 ¼ - 1 ⅜	310	19
37 - 39	1 ½	420	26
40 - 42	1 ⅝	470	29
43 - 48	1 ¾ - 1 ⅞	760	46
49 - 54	2 - 2 ⅛	1050	64
55 - 60	2 ¼ - 2 ⅜	1450	88
61 - 68	2 ½ - 2 ⅝	2100	128
69 - 75	2 ¾ - 2 ⅞	2750	168
76 - 80	3 - 3 ⅛	3600	220
81 - 86	3 ¼ - 3 ⅜	4500	275
87 - 93	3 ½ - 3 ⅝	5500	336
94 - 102	3 ¾ - 4	7000	427
108 - 115	4 ½	12000	732
122 - 130	5	15000	915
140 - 155	5 ½ - 6	23500	1434
158 - 167	6 ½	30000	1831

Instructions for use

Standard pins are normally used in non permanent and pick and place applications.
Safety pins are used for more permanent applications or where the load may slide on the pin causing rotation of the pin.

Resin: Before use please read carefully the instructions of the resin manufacturer. In case of incorrect use of the resin, our spelter material can result in an unsafe termination.
More information can also be obtained from your wire rope supplier.
Always clear the wire rope broom and socket basket from dirt and grease. Make certain that the broomed wires are evenly spaced in the basket, and that the wire and basket are aligned with one another.

White metal or Zinc: When using white metal or zinc, do not preheat the socket to more than 300°C (570°F).
Never shock load a socket.
Socket may not be heated as this may affect their Working Load Limit;
Never use an assembly before the resin is fully hardened.
Socketing should always be done by a qualified individual.

Wedge sockets SO3

Always mount the loaded part of the wire in the centre line of the pin (see figures). Secure the dead end with a wire rope clip. Do not attach the loaded wire to the dead end. The dead end should have a length of 6 times the wire diameter with a minimum of 150 mm. After the first load, inspect that the wire rope and wedge are fully seated. Load may slip if the connection is not properly installed.
Inspect the connection regularly.

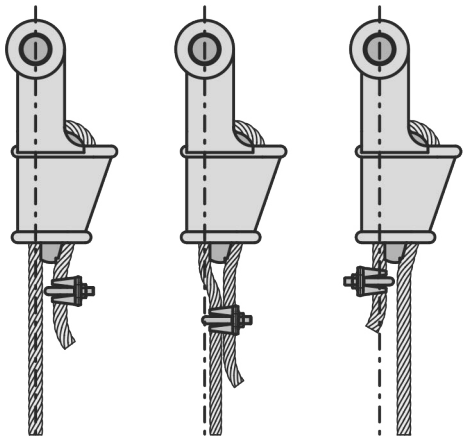

Right Wrong Wrong

CLOSED SPELTER SOCKET

TYPE S01

Material	:	Cast steel
Safety factor	:	5 times
Standards	:	Generally according to US Federal Spec RR-5-550D, type C
Finish	:	Painted/Galvanized ≤ Type No. 215 standard galvanized
Temperature range	:	-40°F up to +392°F, Polar Rated
Standard certification	:	Certificate of Conformity 3.1 material certificate EN 10204

These sockets included our non-rotating system (NRS-system) which prevents the tamp for turning or slipping out of the cone and guarantee a high performance connection.

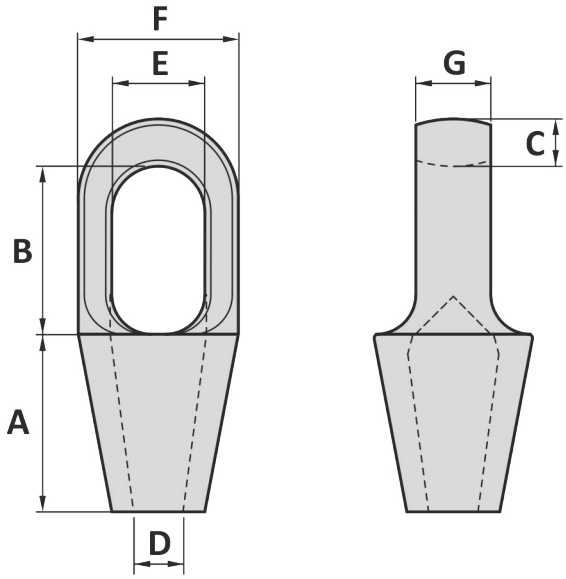

~ specification: 1 = Painted, 9 = Galvanized

Art. No.	Type No.	Wire dia mm	Wire dia inch	WLL ton	MBL ton	A inch	B inch	C inch	D inch	E inch	F inch	G inch	Packing pcs	Weight lbs
47008079	290	6 - 7	¼	1.6	8	2 1/16	1 13/16	7/16	5/16	25/32	1 7/16	½	10	0.6
47008109	292	8 - 10	⅜	2.4	12	2 9/32	2 3/32	9/16	7/16	15/16	1 11/16	⅝	10	0.97
47008139	294	11 - 13	½	4	20	2 ½	2 5/16	23/32	9/16	1 ⅛	2	⅞	10	1.6
47008169	296	14 - 16	⅝	6	30	3 1/32	2 9/16	13/16	23/32	1 ⅜	2 ⅝	1	10	3.1
47008199	298	18 - 19	¾	8	40	3 9/16	2 15/16	1 1/32	13/16	1 21/32	2 15/16	1 7/32	10	4.6
4700201~	201	20 - 22	⅞	12	60	3 31/32	3 9/16	1 5/16	15/16	1 27/32	3 ⅝	1 ½	4	8.8
4700204~	204	23 - 26	1	15	75	4 ½	4 1/16	1 13/32	1 3/32	2 ¼	4 3/16	1 25/32	4	13
4700207~	207	27 - 30	1 ⅛	20	100	5	4 9/16	1 17/32	1 ¼	2 15/32	4 ½	2	4	17
4700212~	212	31 - 36	1 ¼ - 1 ⅜	25	125	5 15/32	5 ⅛	1 ¾	1 ½	2 ¾	5 1/32	2 9/32	2	24
4700215~	215	37 - 39	1 ½	30	150	6	6 3/32	2	1 ⅝	3 ⅛	5 ⅜	2 ½	2	31
4700217~	217	40 - 42	1 ⅝	36	180	6 ½	6 ¾	2 ⅛	1 ¾	3 7/32	5 ¾	2 ¾	2	40
4700219~	219	43 - 48	1 ¾ - 1 ⅞	46	230	7 15/32	7 13/16	2 5/32	2	3 ½	6 ¾	3 1/32		62
4700222~	222	49 - 54	2 - 2 ⅛	56	280	8 ½	8 13/16	2 7/16	2 ¼	3 ⅞	7 ⅝	3 5/16		88
4700224~	224	55 - 60	2 ¼ - 2 ⅜	75	375	8 31/32	9 23/32	2 ⅞	2 9/16	4 5/16	8 ½	3 11/16		115
4700226~	226	61 - 68	2 ½ - 2 ⅝	85	425	9 ¾	10 ⅝	3 5/32	2 ⅞	5 ½	9 ½	4		139
4700227~	227	69 - 75	2 ¾ - 2 ⅞	100	500	11	11 ¼	3 ⅛	3 ⅛	6 ¼	10 ¾	4 ⅞		196
4700228~	228	76 - 80	3 - 3 ⅛	120	600	12	11 ¾	3 ¼	3 ⅜	6 ¾	11 ½	5 ¼		245
4700229~	229	81 - 86	3 ¼ - 3 ⅜	140	700	13	12 ¼	4	3 ⅝	7 ¼	12 ¼	5 ¾		315
4700230~	230	87 - 93	3 ½ - 3 ⅝	150	750	14	13	4	3 29/32	7 ¾	13	6 ¼		366
4700231~	231	94 - 102	3 ¾ - 4	190	950	15	14	4 ¼	4 ¼	8 ½	14 ¼	7		478
4700233~	233	108 - 115	4 ½	240	1200	18 ⅛	16 ¾	4 23/32	4 15/16	9 ¼	15 15/16	7 15/32		745
4700240~	240	122 - 130	5	280	1400	19 11/16	18 11/16	5 ½	5 7/16	10 ⅝	20 9/32	8 ¼		1276
4700250~	250	140 - 155	5 ½ - 6	400	2000	22 27/32	21 21/32	5 29/32	6 5/16	11 13/16	20 1/16	9 27/32		1442
4700260~	260	158 - 167	6 ½	500	2500	26 9/16	23 ⅝	6 ⅞	6 ⅞	12 13/16	23 ⅝	11 13/16		2344

Tolerance: ± 5%, machined parts ± 1/32 inch

08-12-2017

CLOSED SPELTER SOCKET

TYPE S01

Material : Cast steel
Safety factor : 5 times
Standards : Generally according to US Federal Spec RR-5-550D, type C
Finish : Painted/Galvanized
≤ Type No. 215 standard galvanized
Temperature range : -40°C up to +200°C, Polar Rated
Standard certification : Certificate of Conformity
3.1 material certificate EN 10204

These sockets included our non-rotating system (NRS-system) which prevents the tamp for turning or slipping out of the cone and guarantee a high performance connection.

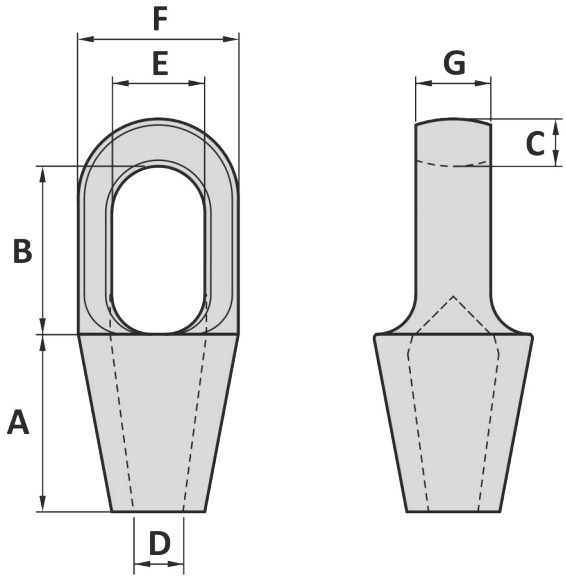

~ specification: 1 = Painted, 9 = Galvanized

Art. No.	Type No.	Wire dia mm	Wire dia inch	WLL ton	MBL ton	A mm	B mm	C mm	D mm	E mm	F mm	G mm	Packing pcs	Weight kg
47008079	290	6 - 7	¼	1.6	8	52	46	11	8	20	37	13	10	0.27
47008109	292	8 - 10	⅜	2.4	12	58	53	14	11	24	43	16	10	0.44
47008139	294	11 - 13	½	4	20	64	59	18	14	29	51	22	10	0.74
47008169	296	14 - 16	⅝	6	30	77	65	21	18	35	67	25	10	1.4
47008199	298	18 - 19	¾	8	40	90	75	26	21	42	75	31	10	2.1
4700201~	201	20 - 22	⅞	12	60	101	90	33	24	47	92	38	4	4
4700204~	204	23 - 26	1	15	75	114	103	36	28	57	106	45	4	5.9
4700207~	207	27 - 30	1 ⅛	20	100	127	116	39	32	63	114	51	4	7.7
4700212~	212	31 - 36	1 ¼ - 1 ⅜	25	125	139	130	44	38	70	128	58	2	11
4700215~	215	37 - 39	1 ½	30	150	152	155	51	41	79	137	64	2	14
4700217~	217	40 - 42	1 ⅝	36	180	165	171	54	44	82	146	70		18
4700219~	219	43 - 48	1 ¾ - 1 ⅞	46	230	190	198	55	51	89	171	77		28
4700222~	222	49 - 54	2 - 2 ⅛	56	280	216	224	62	57	98	194	84		40
4700224~	224	55 - 60	2 ¼ - 2 ⅜	75	375	228	247	73	65	110	216	94		52
4700226~	226	61 - 68	2 ½ - 2 ⅝	85	425	248	270	80	73	140	241	102		63
4700227~	227	69 - 75	2 ¾ - 2 ⅞	100	500	279	286	79	79	159	273	124		89
4700228~	228	76 - 80	3 - 3 ⅛	120	600	305	298	83	86	171	292	133		111
4700229~	229	81 - 86	3 ¼ - 3 ⅜	140	700	330	311	102	92	184	311	146		143
4700230~	230	87 - 93	3 ½ - 3 ⅝	150	750	356	330	102	99	197	330	159		166
4700231~	231	94 - 102	3 ¾ - 4	190	950	381	356	108	108	216	362	178		217
4700233~	233	108 - 115	4 ½	240	1200	460	425	120	125	235	405	190		338
4700240~	240	122 - 130	5	280	1400	500	475	140	138	270	515	210		579
4700250~	250	140 - 155	5 ½ - 6	400	2000	580	550	150	160	300	510	250		654
4700260~	260	158 - 167	6 ½	500	2500	675	600	175	175	325	600	300		1063

Tolerance: ± 5%, machined parts ± 1 mm

08-12-2017

OPEN SPELTER SOCKET

TYPE S02

Material : Cast steel
Safety factor : 5 times
Standards : Generally according to US Federal Spec RR-5-550D, type A
Finish : Painted/Galvanized
≤ Type No. 115 standard galvanized
Temperature range : -40°F up to +392°F, Polar Rated
Standard certification : Certificate of Conformity
3.1 material certificate EN 10204

These sockets included our non-rotating system (NRS-system) which prevents the tamp for turning or slipping out of the cone and guarantee a high performance connection.

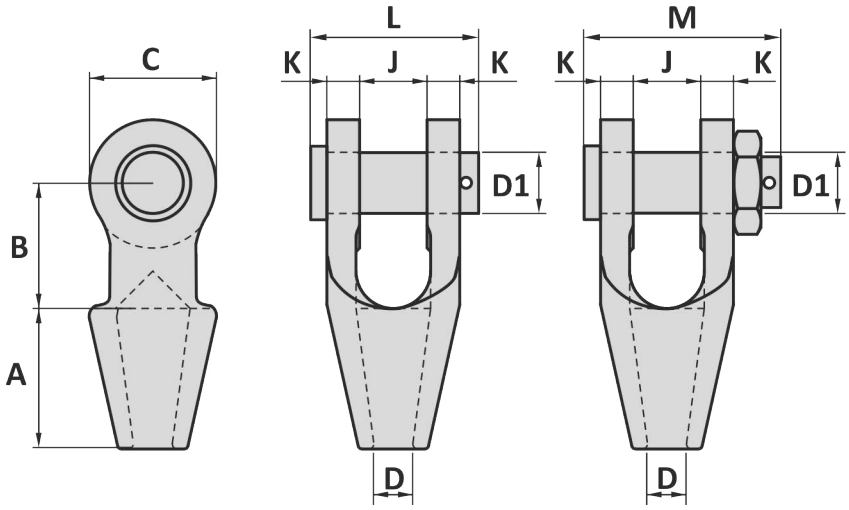

~ specification: 1 = Painted, 9 = Galvanized

Art. No. Standard	Art. No. Safety pin	Type No.	Wire dia mm	Wire dia inch	WLL ton	MBL ton	A inch	B inch	C inch	D inch	D1 inch	J inch	K inch	L inch	M inch	Packing pcs	Weight lbs
	47907089	192	6 - 7	¼	1.6	8	2 1/16	1 9/16	1 11/32	5/16	23/32	11/16	5/16		2 15/32	10	0.97
	47907109	194	8 - 10	⅜	2.4	12	2 9/32	1 25/32	1 9/16	7/16	13/16	25/32	7/16		2 29/32	10	1.8
	47907139	196	11 - 13	½	4	20	2 ½	2	1 15/16	9/16	1 1/32	1	15/32		3 11/32	10	2.9
	47907169	198	14 - 16	⅝	6	30	3 1/32	2 ½	2 7/16	23/32	1 3/16	1 ¼	9/16		3 15/16	10	5.1
4700100~	4790100~	100	17 - 19	¾	8	40	3 ½	3	3 15/16	13/16	1 ⅜	1 ½	⅝	3 31/32	4 5/16	10	7.1
4700104~	4790104~	104	20 - 22	⅞	12	60	3 31/32	3 ½	3 ⅜	15/16	1 ⅝	1 ¾	¾	4 7/16	4 ⅛	4	12
4700108~	4790108~	108	23 - 26	1	15	75	4 ½	4	4 ½	1 3/32	2	2	⅞	5 ⅛	5 13/16	4	21
4700111~	4790111~	111	27 - 30	1 ⅛	20	100	5	4 ½	4 ⅞	1 ¼	2 ¼	2 ¼	1	5 11/16	6 5/16	4	26
4700115~	4790115~	115	31 - 36	1 ¼ - 1 ⅜	25	125	5 15/32	5	5 5/16	1 ½	2 15/32	2 15/32	1 3/32	6 11/32	7 ¼	2	35
4700118~	4790118~	118	37 - 39	1 ½	30	150	6	6 ⅜	6	1 ⅝	2 ¾	3	1 3/16	7	7 13/16	2	53
4700120~	4790120~	120	40 - 42	1 ⅝	36	180	6 ½	6 ½	6 ⅝	1 ¾	3	3	1 5/16	7 ¼	8 1/32	2	64
4700125~	4790125~	125	43 - 48	1 ¾ - 1 ⅞	46	230	7 ½	7	7 15/32	2	3 ½	3 ½	1 17/32	8 19/32	9 21/32		99
4700128~	4790128~	128	49 - 54	2 - 2 ⅛	56	280	8 ½	9	8 ⅛	2 ¼	3 ¾	3 31/32	1 13/16	9 ⅝	10 11/16		143
4700130~	4790130~	130	55 - 60	2 ¼ - 2 ⅜	75	375	9	10	8 ⅞	2 15/32	4 ¼	4 7/16	2 3/32	10 ⅝	11 27/32		194
4700132~	4790132~	132	61 - 68	2 ½ - 2 ⅝	85	425	9 ¾	10 ¾	9 ⅞	2 ⅞	4 ¾	5	2 ⅜	11 15/16	13 3/16		276
4700135~	4790135~	135	69 - 75	2 ¾ - 2 ⅞	100	500	11	11	10 15/32	3 ⅛	5	5 ¼	2 ⅞	13 3/16	14 7/16		357
4700138~	4790138~	138	76 - 80	3 - 3 ⅛	120	600	12	11 ¼	10 25/32	3 ⅜	5 ¼	5 ¾	3	13 15/16	15 3/16		430
4700140~	4790140~	140	81 - 86	3 ¼ - 3 ⅜	140	700	13	11 ¼	11 ¼	3 ⅝	5 ½	6 ¼	3 ⅛	14 11/16	16 7/32		494
4700142~	4790142~	142	87 - 93	3 ½ - 3 ⅝	150	750	14	12 ½	12 3/16	3 29/32	6	6 ¾	3 ¼	15 15/32	17		617
4700144~	4790144~	144	94 - 102	3 ¾ - 4	190	950	15	13 ½	13 ⅞	4 ¼	7	7 ½	3 ½	16 ¾	18 ¼		833
4700146~	4790146~	146	108 - 115	4 ½	240	1200	18 ⅛	19	16 15/16	4 15/16	7 15/32	8 3/16	3 31/32	18 ⅜	20 1/16		1243
4700150~	4790150~	150	122 - 130	5	280	1400	19 11/16	19 11/16	21 21/32	5 7/16	9 27/32	8 ¼	4 23/32	20 9/32	22 1/16		2033
4700160~	4790160~	160	140 - 155	5 ½ - 6	400	2000	22 27/32	19 11/16	23 7/32	6 5/16	10 13/16	9 1/16	5 ½	22 27/32	24 13/32		2855
4700170~	4790170~	170	158 - 167	6 ½	500	2500	26 9/16	23 ⅝	25 3/16	6 ⅞	11 13/32	12 3/16	6 ⅞	26 ⅜	27 15/16		4300

Tolerance: ± 5%, machined parts ± 1/32 inch

08-12-2017

OPEN SPELTER SOCKET TYPE S02

Material : Cast steel
Safety factor : 5 times
Standards : Generally according to US Federal Spec RR-5-550D, type A
Finish : Painted/Galvanized
≤ Type No. 115 standard galvanized
Temperature range : -40°C up to +200°C, Polar Rated
Standard certification : Certificate of Conformity
3.1 material certificate EN 10204

These sockets included our non-rotating system (NRS-system) which prevents the tamp for turning or slipping out of the cone and guarantee a high performance connection.

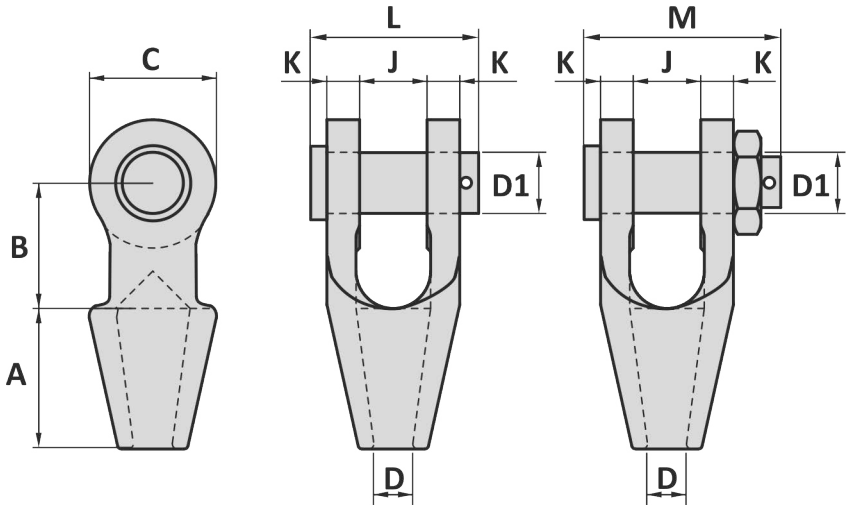

~ specification: 1 = Painted, 9 = Galvanized

Art. No. Standard	Art. No. Safety pin	Type No.	Wire dia mm	Wire dia inch	WLL ton	MBL ton	A mm	B mm	C mm	D mm	D1 mm	J mm	K mm	L mm	M mm	Packing pcs	Weight kg
	47907089	192	6 - 7	¼	1.6	8	52	40	34	8	18	17	8		63	10	0.44
	47907109	194	8 - 10	⅜	2.4	12	58	45	40	11	21	20	11		74	10	0.81
	47907139	196	11 - 13	½	4	20	64	51	49	14	26	25	12		85	10	1.3
	47907169	198	14 - 16	⅝	6	30	77	64	62	18	30	32	14		100	10	2.3
4700100~	4790100~	100	17 - 19	¾	8	40	89	76	100	21	35	38	16	101	110	10	3.2
4700104~	4790104~	104	20 - 22	⅞	12	60	101	89	86	24	41	44	19	113	105	4	5.4
4700108~	4790108~	108	23 - 26	1	15	75	114	101	114	28	51	51	22	130	148	4	9.6
4700111~	4790111~	111	27 - 30	1 ⅛	20	100	127	114	124	32	57	57	25	144	160	4	12
4700115~	4790115~	115	31 - 36	1 ¼ - 1 ⅜	25	125	139	127	135	38	63	63	28	161	184	2	16
4700118~	4790118~	118	37 - 39	1 ½	30	150	152	162	152	41	70	76	30	178	198	2	24
4700120~	4790120~	120	40 - 42	1 ⅝	36	180	165	165	168	44	76	76	33	184	204	2	29
4700125~	4790125~	125	43 - 48	1 ¾ - 1 ⅞	46	230	191	178	190	51	89	89	39	218	245		45
4700128~	4790128~	128	49 - 54	2 - 2 ⅛	56	280	216	229	206	57	95	101	46	244	271		65
4700130~	4790130~	130	55 - 60	2 ¼ - 2 ⅜	75	375	229	254	225	63	108	113	53	270	301		88
4700132~	4790132~	132	61 - 68	2 ½ - 2 ⅝	85	425	248	273	251	73	121	127	60	303	335		125
4700135~	4790135~	135	69 - 75	2 ¾ - 2 ⅞	100	500	279	279	266	79	127	133	73	335	367		162
4700138~	4790138~	138	76 - 80	3 - 3 ⅛	120	600	305	286	274	86	133	146	76	354	386		195
4700140~	4790140~	140	81 - 86	3 ¼ - 3 ⅜	140	700	330	298	286	92	140	159	79	373	412		224
4700142~	4790142~	142	87 - 93	3 ½ - 3 ⅝	150	750	356	318	310	99	152	171	83	393	432		280
4700144~	4790144~	144	94 - 102	3 ¾ - 4	190	950	381	343	352	108	178	191	89	425	464		378
4700146~	4790146~	146	108 - 115	4 ½	240	1200	460	480	430	125	190	208	101	467	510		564
4700150~	4790150~	150	122 - 130	5	280	1400	500	500	550	138	250	210	120	515	560		922
4700160~	4790160~	160	140 - 155	5 ½ - 6	400	2000	580	500	590	160	275	230	140	580	620		1295
4700170~	4790170~	170	158 - 167	6 ½	500	2500	675	600	640	175	290	310	175	670	710		1950

Tolerance: ± 5%, machined parts ± 1 mm

08-12-2017

OPEN WEDGE SOCKET

TYPE S03

Material : Cast steel
Safety factor : 5 times
Standards : Generally according to US Federal Spec RR-5-550D, type B
Finish : Painted/Galvanized
≤ Type No. 5 standard galvanized
Temperature range : -40°C up to +200°C, Polar Rated
Standard certification : Certificate of Conformity
3.1 material certificate EN 10204

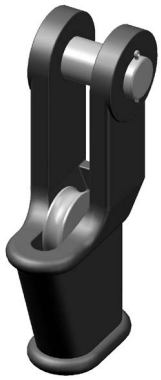

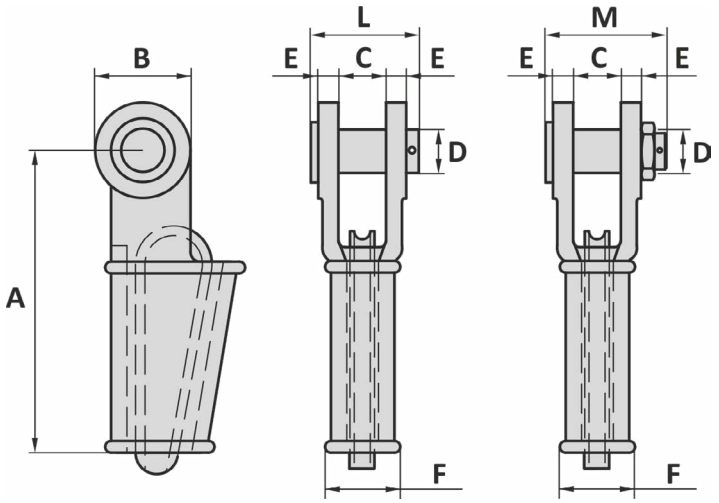

~ specification: 1 = Painted, 9 = Galvanized

Art. No. Standard	Art. No. Safety pin	Type No.	Wire dia mm	Wire dia inch	WLL ton	MBL ton	A mm	B mm	C mm	D mm	E mm	F mm	L mm	M mm	Packing pcs	Weight kg
47000009	47900009	0.5	9 - 10	⅜	2	10	146	47	21	20	11	26	69	80	10	1.7
47000019	47900019	1	11 - 13	½	3.2	16	146	57	26	20	12	32	78	84	10	2.3
47000029	47900029	2	14 - 16	⅝	5	25	176	70	32	30	14	44	92	101	4	3.9
47000039	47900039	3	17 - 19	¾	6.4	32	212	80	38	35	16	44	101	110	4	6.1
47000049	47900049	4	20 - 22	⅞	9	45	240	96	44	41	19	52	113	126	2	9.3
47000059	47900059	5	23 - 26	1	14	70	274	114	51	50	22	58	130	148	2	15
4700006~	4790006~	6	27 - 29	1 ⅛	20	100	310	130	57	57	25	66	144	160	2	21
4700007~	4790007~	7	30 - 33	1 ¼	22	110	350	146	63	63	28	79	161	184	2	33
4700008~	4790008~	8	34 - 36	1 ⅜	25	125	400	148	69	63	28	79	161	184		39
4700009~	4790009~	9	37 - 40	1 ½	30	150	450	160	76	70	30	93	178	198		53
4700010~	4790010~	10	41 - 43	1 ⅝	40	200	500	174	76	76	33	95	184	204		68
4700011~	4790011~	11	44 - 48	1 ¾ - 1 ⅞	52	260	550	200	89	89	39	111	218	245		98
4700012~	4790012~	12	49 - 53	2	56	280	650	200	101	95	46	140	244	271		123
4700013~	4790013~	13	54 - 59	2 ¼	72	360	660	250	113	108	53	136	270	301		178
4700014~	4790014~	14	60 - 68	2 ½	90	450	840	270	127	121	60	161	303	335		281
4700015~	4790015~	15	72 - 76	3	104	520	1000	300	146	133	76	186	354	386		469
4700016~	4790016~	16	81 - 86	3 ¼ - 3 ⅜	125	625	1100	300	159	140	79	215	373	415		630

Tolerance: ± 5%, machined parts ± 1 mm

Art. No. Standard	Art. No. Safety pin	Type No.	Wire dia mm	Wire dia inch	WLL ton	MBL ton	A inch	B inch	C inch	D inch	E inch	F inch	L inch	M inch	Packing pcs	Weight lbs
47000009	47900009	0.5	9 - 10	⅜	2	10	5 ¾	1 27/32	13/16	25/32	7/16	1 1/32	2 23/32	3 5/32	10	3.7
47000019	47900019	1	11 - 13	½	3.2	16	5 ¾	2 ¼	1 1/32	25/32	15/32	1 ¼	3 1/16	3 5/16	10	5.1
47000029	47900029	2	14 - 16	⅝	5	25	6 15/16	2 ¾	1 ¼	1 3/16	9/16	1 ¾	3 ⅝	3 31/32	4	8.6
47000039	47900039	3	17 - 19	¾	6.4	32	8 11/32	3 5/32	1 ½	1 ⅜	⅝	1 ¾	3 31/32	4 5/16	4	13
47000049	47900049	4	20 - 22	⅞	9	45	9 7/16	3 25/32	1 ¾	1 ⅝	¾	2 1/16	4 7/16	4 31/32	2	21
47000059	47900059	5	23 - 26	1	14	70	10 25/32	4 ½	2	1 31/32	⅞	2 9/32	5 ⅛	5 13/16	2	33
4700006~	4790006~	6	27 - 29	1 ⅛	20	100	12 3/16	5 ⅛	2 ¼	2 ¼	1	2 19/32	5 11/16	6 5/16	2	46
4700007~	4790007~	7	30 - 33	1 ¼	22	110	13 25/32	5 ¾	2 15/32	2 15/32	1 3/32	3 ⅛	6 11/32	7 ¼	2	73
4700008~	4790008~	8	34 - 36	1 ⅜	25	125	15 ¾	5 13/16	2 23/32	2 15/32	1 3/32	3 ⅛	6 11/32	7 ¼		86
4700009~	4790009~	9	37 - 40	1 ½	30	150	17 23/32	6 5/16	3	2 ¾	1 3/16	3 21/32	7	7 13/16		117
4700010~	4790010~	10	41 - 43	1 ⅝	40	200	19 11/16	6 27/32	3	3	1 5/16	3 ¾	7 ¼	8 1/32		150
4700011~	4790011~	11	44 - 48	1 ¾ - 1 ⅞	52	260	21 21/32	7 ⅞	3 ½	3 ½	1 17/32	4 ⅜	8 19/32	9 21/32		216
4700012~	4790012~	12	49 - 53	2	56	280	25 19/32	7 ⅞	3 31/32	3 ¾	1 13/16	5 ½	9 ⅝	10 11/16		271
4700013~	4790013~	13	54 - 59	2 ¼	72	360	26	9 27/32	4 7/16	4 ¼	2 3/32	5 11/32	10 ⅝	11 27/32		392
4700014~	4790014~	14	60 - 68	2 ½	90	450	33 1/16	10 ⅝	5	4 ¾	2 ⅜	6 11/32	11 15/16	13 3/16		619
4700015~	4790015~	15	72 - 76	3	104	520	39 ⅜	11 13/16	5 ¾	5 ¼	3	7 5/16	13 15/16	15 3/16		1034
4700016~	4790016~	16	81 - 86	3 ¼ - 3 ⅜	125	625	43 5/16	11 13/16	6 ¼	5 ½	3 ⅛	8 15/32	14 11/16	16 11/32		1389

Tolerance: ± 5%, machined parts ± 1/32 inch

08-12-2017

Material : Cast steel
Safety factor : 5 times
Finish : Painted/Galvanized
≤ Type No. 519 standard galvanized
Temperature range : -40°C up to +200°C, Polar Rated
Standard certification : Certificate of Conformity
3.1 material certificate EN 10204

CR sockets give the best possible connection between a chain and rope anchoring system. These sockets included our non-rotating system (NRS-system) which prevents the tamp for turning or slipping out of the cone and guarantee a high performance connection.

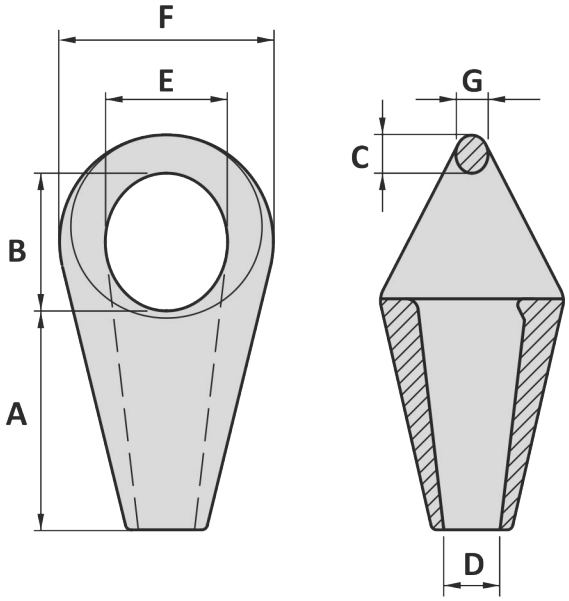

~ specification: 1 = Painted, 9 = Galvanized

Art. No.	Type No.	Wire dia mm	Wire dia inch	WLL ton	MBL ton	A mm	B mm	C mm	D mm	E mm	F mm	G mm	Weight kg
4700512~	512	31 - 36	1 ¼ - 1 ⅜	28	140	140	85	38	39	75	124	35	7.2
4700517~	517	38 - 42	1 ½ - 1 ⅝	32	160	160	110	42	44	92	150	38	11
4700519~	519	43 - 48	1 ¾ - 1 ⅞	40	200	188	128	50	51	110	180	45	18
4700522~	522	49 - 54	2 - 2 ⅛	50	250	215	125	55	57	115	200	50	25
4700524~	524	55 - 60	2 ¼ - 2 ⅜	60	300	230	145	65	63	135	230	57	35
4700526~	526	61 - 68	2 ½ - 2 ⅝	80	400	250	160	75	73	160	262	65	51
4700527~	527	69 - 75	2 ¾ - 2 ⅞	100	500	280	175	80	79	171	278	70	62
4700528~	528	76 - 80	3 - 3 ⅛	120	600	315	210	85	86	184	300	75	75
4700529~	529	81 - 86	3 ¼ - 3 ⅜	140	700	340	205	100	92	204	320	90	93
4700530~	530	87 - 93	3 ½ - 3 ⅝	160	800	360	220	105	99	215	340	95	110
4700531~	531	94 - 102	3 ¾ - 4	180	900	380	240	110	108	234	376	100	141
4700533~	533	108 - 115	4 ¼ - 4 ½	200	1000	450	260	125	120	252	400	110	186
4700540~	540	122 - 130	4 ¾ - 5	250	1250	517	293	140	140	275	460	125	317

Tolerance: ± 5%, machined parts ± 1 mm

Art. No.	Type No.	Wire dia mm	Wire dia inch	WLL ton	MBL ton	A inch	B inch	C inch	D inch	E inch	F inch	G inch	Weight lbs
4700512~	512	31 - 36	1 ¼ - 1 ⅜	28	140	5 ½	3 11/32	1 ½	1 17/32	2 15/16	4 ⅞	1 ⅜	16
4700517~	517	38 - 42	1 ½ - 1 ⅝	32	160	6 5/16	4 5/16	1 21/32	1 ¾	3 ⅝	5 29/32	1 ½	24
4700519~	519	43 - 48	1 ¾ - 1 ⅞	40	200	7 13/32	5 1/32	1 31/32	2	4 5/16	7 3/32	1 25/32	40
4700522~	522	49 - 54	2 - 2 ⅛	50	250	8 15/32	4 15/16	2 5/32	2 ¼	4 17/32	7 ⅞	1 31/32	55
4700524~	524	55 - 60	2 ¼ - 2 ⅜	60	300	9 1/16	5 23/32	2 9/16	2 15/32	5 5/16	9 1/16	2 ¼	77
4700526~	526	61 - 68	2 ½ - 2 ⅝	80	400	9 27/32	6 5/16	2 15/16	2 ⅞	6 5/16	10 5/16	2 9/16	112
4700527~	527	69 - 75	2 ¾ - 2 ⅞	100	500	11 1/32	6 ⅞	3 5/32	3 ⅛	6 ¾	10 15/16	2 ¾	137
4700528~	528	76 - 80	3 - 3 ⅛	120	600	12 13/32	8 ¼	3 11/32	3 ⅜	7 ¼	11 13/16	2 15/16	165
4700529~	529	81 - 86	3 ¼ - 3 ⅜	140	700	13 ⅜	8 1/16	3 15/16	3 ⅝	8 1/32	12 19/32	3 9/16	205
4700530~	530	87 - 93	3 ½ - 3 ⅝	160	800	14 3/16	8 21/32	4 ⅛	3 29/32	8 15/32	13 ⅜	3 ¾	243
4700531~	531	94 - 102	3 ¾ - 4	180	900	14 31/32	9 7/16	4 5/16	4 ¼	9 7/32	14 13/16	3 15/16	311
4700533~	533	108 - 115	4 ¼ - 4 ½	200	1000	17 23/32	10 ¼	4 15/16	4 23/32	9 15/16	15 ¾	4 5/16	410
4700540~	540	122 - 130	4 ¾ - 5	250	1250	20 11/32	11 17/32	5 ½	5 ½	10 13/16	18 ⅛	4 15/16	699

Tolerance: ± 5%, machined parts ± 1/32 inch

03-07-2018

PMS / LTM FORGED SOCKET

TYPE S05

Material	:	Alloy steel, Grade R3/R3S/R4/R4S/R5
Finish	:	Painted
Temperature range	:	-40°C up to +200°C, Polar Rated
Standard certification	:	Certificate of Conformity 3.1 material certificate EN 10204

PMS / LTM forged sockets are prepared to operate in a wire-rope connection with a flange-mounted bending stiffner.
The stiffner protects the rope for buckling during transport and installation.

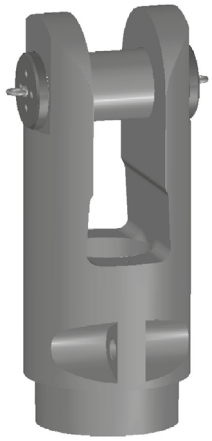

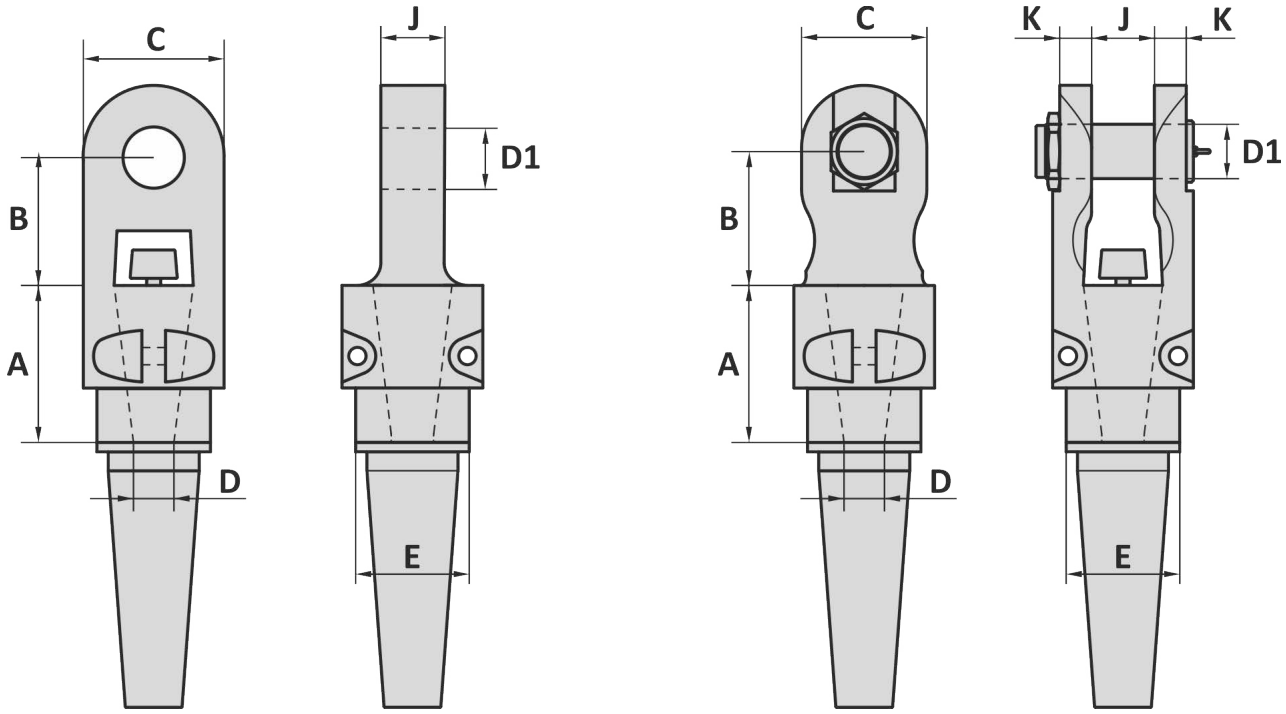

Dimensions on customer request
Available with: Tapped holes (for lifting)
Orkot isolation
Padeyes
Anode
Bend stiffner
Domed nuts
Locking system

Tolerance: Machined parts ± 1 mm

14-10-2014

Material : Alloy steel, Grade R3/R3S/R4/R4S/R5
Safety factor : 5 times
Finish : Painted
Temperature range : -40°C up to +200°C
Standard certification : Certificate of Conformity
3.1 material certificate EN 10204

Suitable for use with common studless links and end links
Non-standard sizes or custom products available on request

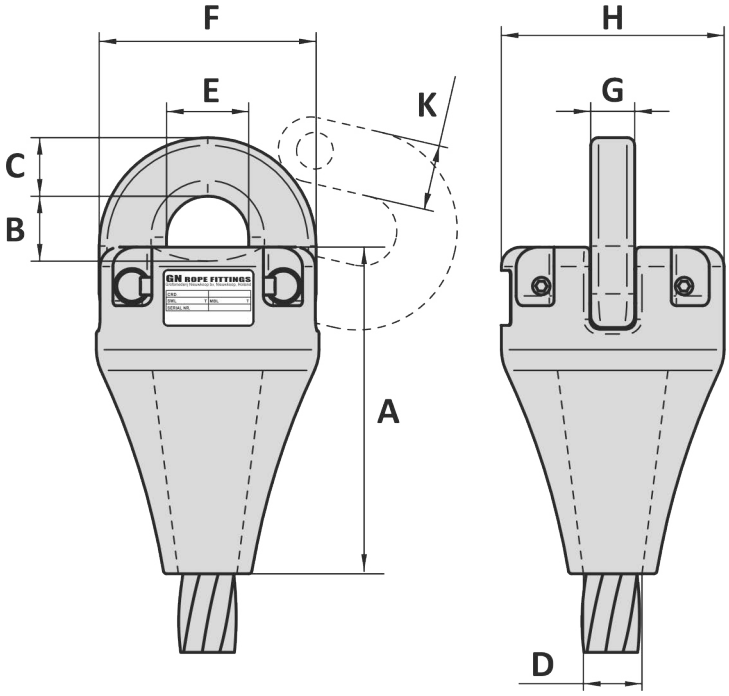

Art. No.	Type No.	Wire dia inch	Chain inch	Chain inch	MBL ton	A mm	B mm	C mm	D mm	E mm	F mm	G mm	H mm	K mm	Weight kg
47006229	622	2 - 2 ¼	2	2	250	304	70	60	59	84	222	45	238	69	47
47006289	628	3 - 3 ¼	3	3	600	465	120	100	86	112	340	70	378	114	211
47006309	630	3 ½ - 3 ¾	3 ½	3 ½	800	520	152	120	99	140	400	80	420	130	304

Tolerance: ± 5%, machined parts ± 1 mm

Art. No.	Type No.	Wire dia inch	Chain inch	Chain inch	MBL ton	A inch	B inch	C inch	D inch	E inch	F inch	G inch	H inch	K inch	Weight lbs
47006229	622	2 - 2 ¼	2	2	250	11 31/32	2 ¾	2 ⅜	2 5/16	3 5/16	8 ¾	1 25/32	9 ⅜	2 23/32	47
47006289	628	3 - 3 ¼	3	3	600	18 5/16	4 23/32	3 15/16	3 ⅜	4 13/32	13 ⅜	2 ¾	14 ⅞	4 ½	211
47006309	630	3 ½ - 3 ¾	3 ½	3 ½	800	20 15/32	6	4 23/32	3 29/32	5 ½	15 ¾	3 5/32	16 17/32	5 ⅛	304

Tolerance: ± 5%, machined parts ± 1/32 inch

04-12-2014

STOPPER SOCKET

TYPE S012

Material : Alloy steel
Finish : Zinc painted

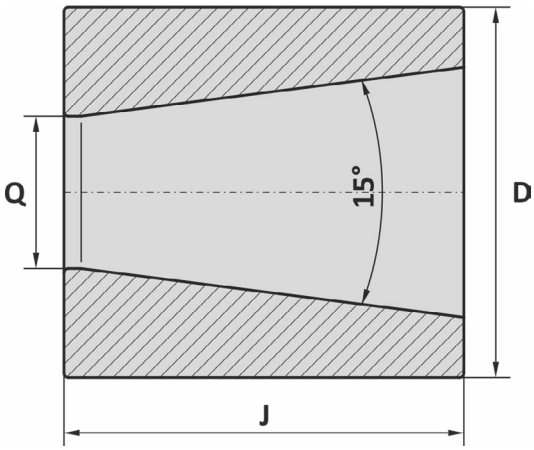

Art. No.	Rope inch	Strand dia min inch	Strand dia max inch	MBL ton	D inch	J inch	Q inch	Weight lbs
47800012	15/32	15/32	1/2	17	2 3/4	2 7/8	7/8	2.4
47800016	5/8	9/16	5/8	26	2 15/16	3 9/16	1	4.0
47800019	3/4	11/16	3/4	32	3 5/32	4 3/16	1 3/32	5.5
47800026	1 1/32	25/32	29/32	70	3 9/16	4 7/8	1 7/32	7.9
47800028	1 3/32	29/32	1 1/32	100	3 15/16	5 9/16	1 3/8	11
47800032	1 1/4	1 1/16	1 1/8	125	4 1/8	5 7/8	1 1/2	13
47800035	1 3/8	1 3/16	1 1/4	125	3 15/16	5 1/4	1 5/8	10
47800038	1 1/2	1 5/16	1 3/8	150	4 1/8	5 1/2	1 3/4	11
47800042	1 21/32	1 13/32	1 1/2	200	4 5/16	5 3/4	1 27/32	13
47800045	1 25/32	1 17/32	1 21/32	260	4 23/32	6	1 31/32	17
47800051	2	1 11/16	1 25/32	280	5 1/8	6 1/4	2 1/8	20
47800054	2 1/8	1 13/16	1 7/8	280	5 1/2	6 1/2	2 9/32	24
47800057	2 1/4	1 15/16	2	360	5 29/32	6 25/32	2 13/32	31
47800060	2 3/8	2 1/16	2 1/8	360	6 5/16	7	2 1/2	37
47800063	2 15/32	2 5/32	2 9/32	450	6 11/16	7 1/4	2 3/4	44
47800067	2 5/8	2 5/16	2 3/8	480	7 3/32	7 15/32	2 7/8	53
47800073	2 7/8	2 13/32	2 9/16	480	7 15/32	7 3/4	2 15/16	62
47800076	3	2 19/32	2 3/4	520	8 1/4	8 1/8	3 5/32	77
47800083	3 1/4	2 13/16	3	600	8 21/32	8 7/8	3 3/8	99
47800089	3 1/2	3 1/8	3 1/4	700	9 27/32	9 3/4	3 25/32	130
47800095	3 3/4	3 11/32	3 9/16	875	10 1/4	10 3/8	4	161
47800102	4	3 5/8	3 25/32	875	11 1/32	11 1/8	4 1/4	194
47800108	4 1/4	3 7/8	4	1100	11 13/16	11 3/4	4 17/32	234
47800121	4 3/4	4 3/32	4 3/8	1250	11 13/16	11 3/4	5 9/32	227
47800133	5 1/4	4 1/2	4 3/4	1350	12 19/32	12 1/2	5 3/4	265
47800146	5 3/4	4 27/32	5 1/8	1350	13 3/8	13 3/4	6 1/4	340
47800152	6	5 1/4	5 1/2	1350	13 25/32	15	6 1/2	390

Tolerance: Machined parts ± 1/32 inch

22-06-2018

STOPPER SOCKET

TYPE S012

Material : Alloy steel
Finish : Zinc painted

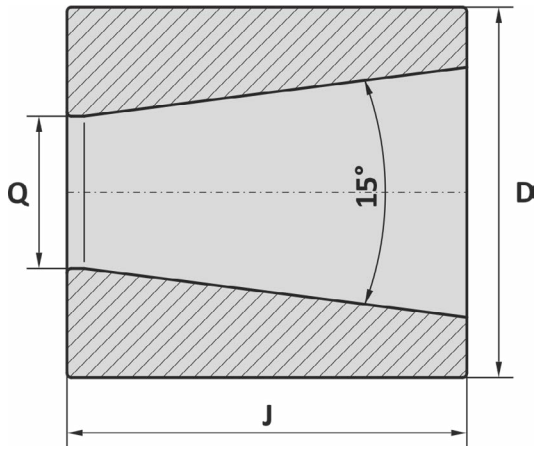

Art. No.	Rope mm	Strand dia min mm	Strand dia max mm	MBL ton	D mm	J mm	Q mm	Weight kg
47800012	12	12	13	17	70	73	22	1.1
47800016	16	14	16	26	75	90	25	1.8
47800019	19	17	19	32	80	106	28	2.5
47800026	26	20	23	70	90	124	31	3.6
47800028	28	23	26	100	100	141	35	4.8
47800032	32	27	29	125	105	149	38	5.7
47800035	35	30	32	125	100	133	41	4.5
47800038	38	33	35	150	105	140	44	5.0
47800042	42	36	38	200	110	146	47	5.9
47800045	45	39	42	260	120	152	50	7.5
47800051	51	43	45	280	130	159	54	9.0
47800054	54	46	48	280	140	165	58	11
47800057	57	49	51	360	150	172	61	14
47800060	60	52	54	360	160	178	64	17
47800063	63	55	58	450	170	184	70	20
47800067	67	59	60	480	180	190	73	24
47800073	73	61	65	480	190	197	75	28
47800076	76	66	70	520	210	206	80	35
47800083	83	71	76	600	220	225	86	45
47800089	89	79	83	700	250	248	96	59
47800095	95	85	90	875	260	264	102	73
47800102	102	92	96	875	280	283	108	88
47800108	108	98	102	1100	300	298	115	106
47800121	121	104	111	1250	300	298	134	103
47800133	133	114	121	1350	320	318	146	120
47800146	146	123	130	1350	340	349	159	154
47800152	152	133	140	1350	350	381	165	177

Tolerance: Machined parts ± 1 mm

22-06-2018

NOTES

SC1
Master link

SC2
Connecting link for pennant lines

SC3
CR connector

SC4
Pear connecting link

SC5
Master link assembly

SC7
Chain adapter with special end link

SC10
Installation link

SC11
Offshore master link

Application information

Links are used in lifting, mooring and anchor legs

Master links (SC1) are used on 1 or 2 leg systems
Master link assemblies (SC5) are used on 2- 3 and 4 leg systems
Connecting links (SC2) are mainly used in pennant lines.
CR and Pear connectors (SC3 and SC4) are used for chain assembly and CR-Socket assemblies.
Chain adapters (SC7) are used for anchor chain legs.

Instructions for use

Master links and master link assemblies: Most of the time the load bearing component that is in connection with a link is of a rounded shape. Point loading of links is allowed but the minimum diameter of a rounded component should be equal or bigger than the diameter of the link being used. Bigger diameters to increase contact area can be beneficial. Sharp edges should be avoided.
Stress that leads to a non-uniform load distribution, e.g. which is caused as a result of an off-centre introduction of force must be taken into account when selecting the lifting accessories and their components
CR, **Pear** and **chain adaptors**, have the same proof load and break load as the applied anchor chain size and grade. For more information see application information mooring.

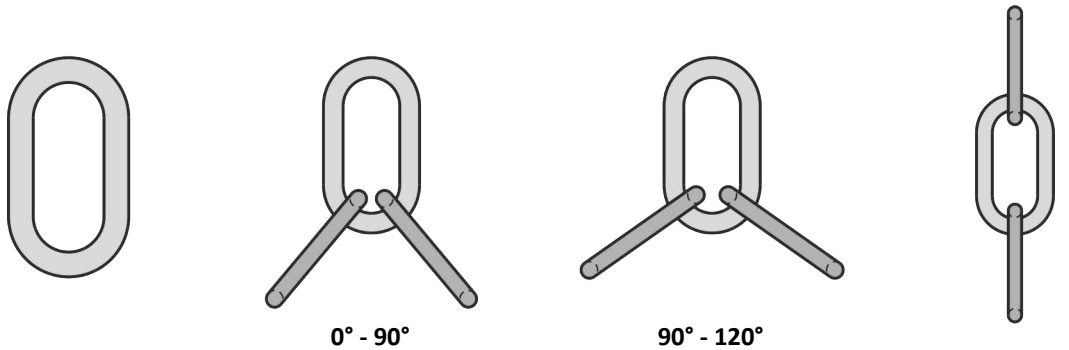

100% WLL

0° - 90°
100% WLL

90° - 120°
70% WLL

70% WLL

Temperatures

If extreme temperature situations are applicable,
the following load reduction must be taken into account:

Temperature	Reduction for elevated temperatures New Working Load Limit
up to 200°C	100% of Rated Working Load Limit
200°C - 300°C	70% of Rated Working Load Limit
300°C - 400°C	50% of Rated Working Load Limit
> 400°C	not allowed

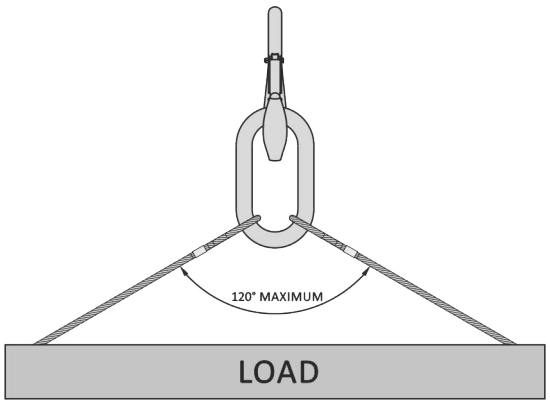

Inspection

Inspection should take place at least every six months and even more frequently when the links are used in severe operating conditions.
Links should be inspected before use to ensure that:

- All markings are legible
- Links are not distorted or unduly worn
- The links are free from nicks, gouges, cracks and corrosion
- Links may not be heat treated as this may affect their Working Load Limit
- Never modify, repair or reshape links by machining, heating or bending as this will affect the Working Load Limit
- Welding on links is not allowed

Loads installation link

	Grade R3 (kN)	Grade R3S (kN)	Grade R4 (kN)	Grade R4S (kN)	Grade R5 (kN)
Proof load	$0.0156D^2$ (44-0.08D)	$0.0174D^2$ (44-0.08D)	$0.0192D^2$ (44-0.08D)	$0.0213D^2$ (44-0.08D)	$0.0223D^2$ (44-0.08D)
Break load	$0.0223D^2$ (44-0.08D)	$0.0249D^2$ (44-0.08D)	$0.0274D^2$ (44-0.08D)	$0.0304D^2$ (44-0.08D)	$0.0320D^2$ (44-0.08D)

D is 0.6 * the chain nominal diameter

Markings

As a minimum the following markings must be hard stamped in the link.

- Applicable Working load or Proof load.
- Brand mark
- Production number

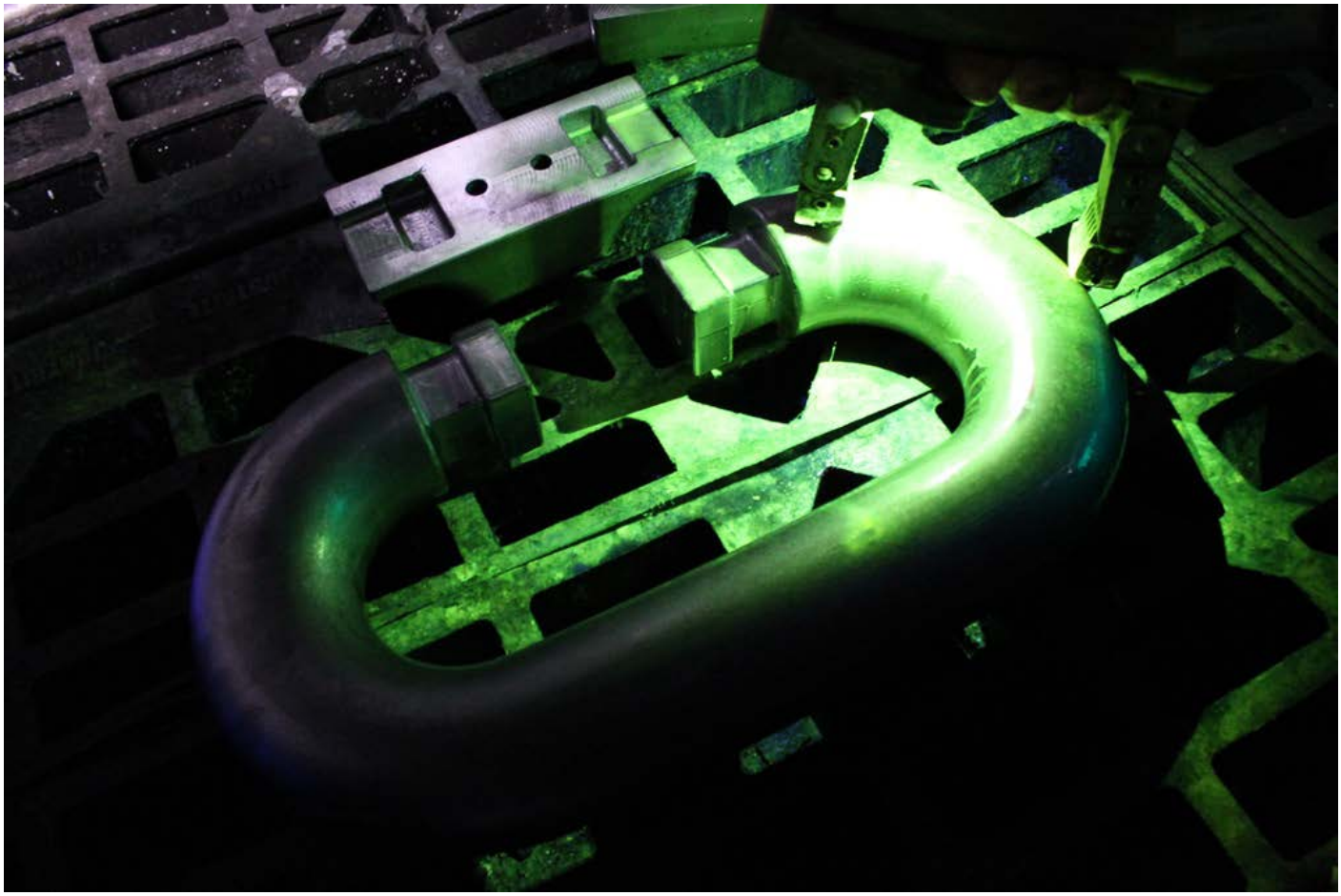

MASTER LINK

TYPE SC1

Material	:	Alloy steel
Safety factor	:	≤ 12914000 - 400 ton: 5 times
		> 12916000 - 400 ton: 4 times
Standards	:	Generally according to EN 1677-4
Finish	:	Painted
Temperature range	:	≤ 12914000 - 400 ton, -4°F up to +392°F
		> 12916000 - 400 ton, -40°F up to +392°F, Polar Rated
Standard certification	:	Certificate of Conformity
		3.1 material certificate EN 10204

Non-standard sizes or custom products available on request

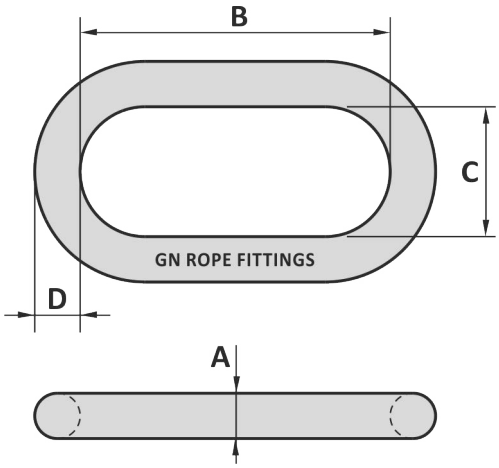

Art. No.	WLL ton	MBL ton	A inch	B inch	C inch	D inch	Weight lbs
12220000	5	25	⅞	6 5/16	3 9/16	⅞	3.3
12260000	8	40	1 1/32	7 3/32	3 15/16	1 1/32	5.1
12320000	10	50	1 ¼	7 ⅞	4 5/16	1 ¼	8.6
12360000	16	80	1 13/32	10 ¼	5 ½	1 13/32	14
12450000	26	130	1 25/32	13 ⅜	7 3/32	1 25/32	29
12510000	36	180	2	13 25/32	7 15/32	2	37
12570000	47	235	2 ¼	15 ¾	7 ⅞	2 ¼	53
12630000	58	290	2 15/32	16 15/16	8 21/32	2 15/32	71
12720000	84	420	2 27/32	18 ⅛	9 27/32	2 27/32	99
12800000	105	525	3 5/32	17 23/32	9 27/32	3 5/32	123
12900000	131	655	3 9/16	18 ⅛	11 13/16	3 9/16	170
12910000	157	785	3 15/16	19 11/16	11 13/16	3 15/16	223
12912500	250	1250	4 17/32	23 ⅝	15 ¾	4 17/32	359
12912510	300	1500	4 17/32	23 ⅝	11 13/16	4 17/32	340
12913500	400	2000	4 17/32	27 9/16	9 27/32	4 17/32	366
12914000	400	2000	4 17/32	19 9/32	9 27/32	4 17/32	291
12916000	400	1600	6 3/32	31 ½	15 ¾	8 1/16	1058
12917000	500	2000	6 ⅞	31 ½	15 ¾	8 21/32	1329
12918000	600	2400	7 11/16	31 ½	15 ¾	9 1/16	1614
12918100	700	2800	7 ⅞	33 15/32	15 ¾	9 ¼	1753
12918200	800	3200	8 ¼	33 15/32	15 ¾	9 21/32	1942
12918300	900	3600	9 1/16	35 7/16	15 ¾	10 ⅝	2467
12918400	1000	4000	9 7/16	35 7/16	15 ¾	11 1/32	2703
12918500	1250	5000	10 ¼	39 ⅜	15 ¾	12 3/16	3481
12918600	1500	6000	10 ⅝	39 ⅜	15 ¾	12 19/32	3774

Tolerance: Forged parts ± 5%

14-06-2016

Material : Alloy steel
Safety factor : ≤ 12914000 - 400 ton: 5 times
> 12916000 - 400 ton: 4 times
Standards : Generally according to EN 1677-4
Finish : Painted
Temperature range : ≤ 12914000 - 400 ton, -20°C up to +200°C
> 12916000 - 400 ton, -40°C up to +200°C, Polar Rated
Standard certification : Certificate of Conformity
3.1 material certificate EN 10204

Non-standard sizes or custom products available on request

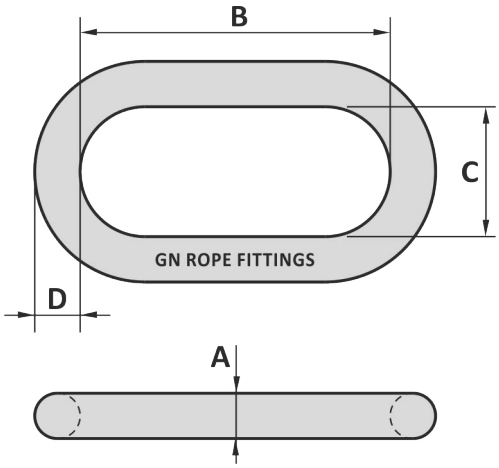

Art. No.	WLL ton	MBL ton	A mm	B mm	C mm	D mm	Weight kg
12220000	5	25	22	160	90	22	1.5
12260000	8	40	26	180	100	26	2.3
12320000	10	50	32	200	110	32	3.9
12360000	16	80	36	260	140	36	6.3
12450000	26	130	45	340	180	45	13
12510000	36	180	51	350	190	51	17
12570000	47	235	57	400	200	57	24
12630000	58	290	63	430	220	63	32
12720000	84	420	72	460	250	72	45
12800000	105	525	80	450	250	80	56
12900000	131	655	90	460	300	90	77
12910000	157	785	100	500	300	100	101
12912500	250	1250	115	600	400	115	163
12912510	300	1500	115	600	300	115	154
12913500	400	2000	115	700	250	115	166
12914000	400	2000	115	490	250	115	132
12916000	400	1600	155	800	400	205	480
12917000	500	2000	175	800	400	220	603
12918000	600	2400	195	800	400	230	732
12918100	700	2800	200	850	400	235	795
12918200	800	3200	210	850	400	245	881
12918300	900	3600	230	900	400	270	1119
12918400	1000	4000	240	900	400	280	1226
12918500	1250	5000	260	1000	400	310	1579
12918600	1500	6000	270	1000	400	320	1712

Tolerance: Forged parts ± 5%

14-06-2016

CONNECTING LINK FOR PENNANT LINES TYPE SC2

Material	:	Alloy steel
Safety factor	:	5 times
Finish	:	Painted
Temperature range	:	-20°C up to +200°C
Standard certification	:	Certificate of Conformity 3.1 material certificate EN 10204

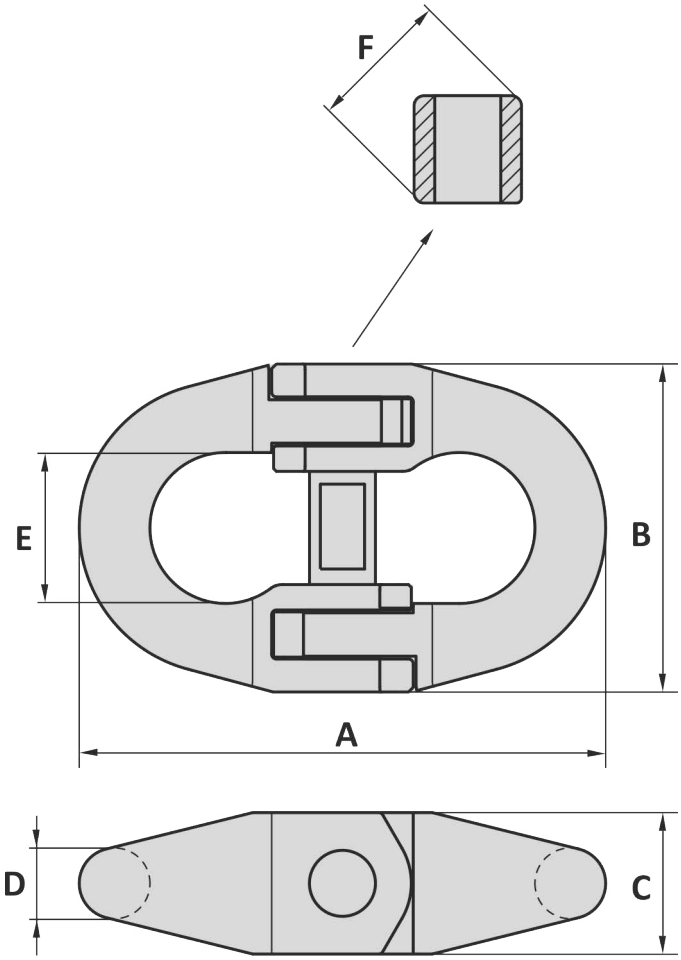

Art. No.	WLL ton	PL ton	A mm	B mm	C mm	D mm	E mm	F mm	Weight kg
40000001	110	220	560	360	108	76	156	150	76

Tolerance: ± 5%

Art. No.	WLL ton	PL ton	A inch	B inch	C inch	D inch	E inch	F inch	Weight lbs
40000001	110	220	22 1/16	14 3/16	4 1/4	3	6 1/8	5 29/32	168

Tolerance: ± 5%

01-07-2011

Material : Alloy steel, Grade R4
Finish : Self colored
Temperature range : -20°C up to +200°C
Standard certification : Certificate of Conformity
3.1 material certificate EN 10204

Can be assembled with our range of swivels, CR-sockets and chains

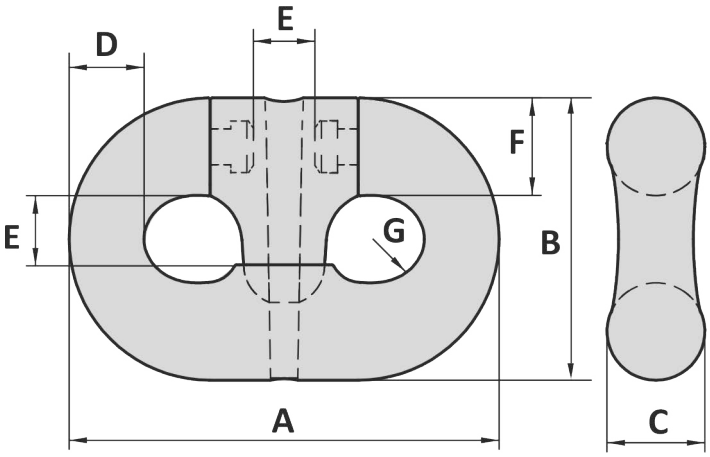

Art. No.	Chain mm	Chain inch	CR socket No.	PL kN	MBL kN	A mm	B mm	C mm	D mm	E mm	F mm	G mm	Weight kg
40000003	76	3	522 - 528	4731	6001	456	296	103	76	89	103	46	58
40000005	84	3 ¼	524 - 529	5682	7208	498	324	112	83	97	112	50	82
40000004	89	3 ½	524 - 530	6310	8004	534	347	120	89	104	120	53	95

Tolerance: Forged parts ± 5%

Art. No.	Chain mm	Chain inch	CR socket No.	PL kN	MBL kN	A inch	B inch	C inch	D inch	E inch	F inch	G inch	Weight lbs
40000003	76	3	522 - 528	4731	6001	17 15/16	11 21/32	4 1/16	3	3 ½	4 1/16	1 13/16	128
40000005	84	3 ¼	524 - 529	5682	7208	19 ⅝	12 ¾	4 13/32	3 ¼	3 13/16	4 13/32	1 31/32	181
40000004	89	3 ½	524 - 530	6310	8004	21 1/32	13 21/32	4 13/32	3 ½	4 3/32	4 23/32	2 3/32	209

Tolerance: Forged parts ± 5%

11-11-2013

PEAR CONNECTING LINK

TYPE SC4

Material : Alloy steel, Grade R4
Finish : Self colored
Temperature range : -20°C up to +200°C
Standard certification : Certificate of Conformity
3.1 material certificate EN 10204

Can be assembled with our range of swivels, CR-sockets and chains

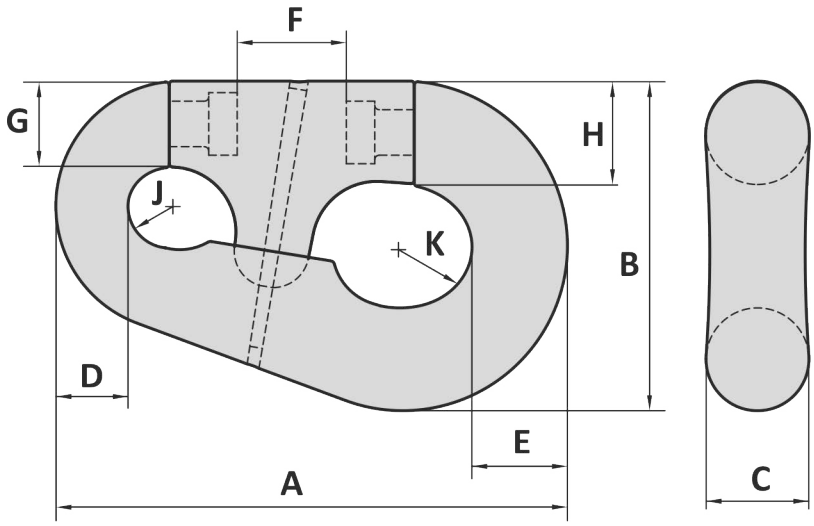

Art. No.	Type No.	Chain mm	A mm	B mm	C mm	D mm	E mm	F mm	G mm	H mm	J mm	K mm	Weight kg
40000106	6	52 - 60	480	337	103	66	83	125	81	103	43	71	61
40000107	7	62 - 79	570	370	113	85	96	155	92	113	49	70	100
40000108	8	81 - 92	655	430	131	99	129	162	119	131	58	81	150
40000110	10	97 - 102	900	580	181	127	168	192	151	181	75	104	385

Tolerance: Forged parts ± 5%

Art. No.	Type No.	Chain inch	A inch	B inch	C inch	D inch	E inch	F inch	G inch	H inch	J inch	K inch	Weight lbs
40000106	6	2 1/16 - 2 3/8	18 29/32	13 1/4	4 1/16	2 19/32	3 1/4	4 15/16	3 3/16	4 1/16	1 11/16	2 13/16	134
40000107	7	2 7/16 - 3 1/8	22 7/16	14 9/16	4 7/16	3 11/32	3 25/32	6 3/32	3 5/8	4 7/16	1 15/16	2 3/4	220
40000108	8	3 3/16 - 3 5/8	25 25/32	16 15/16	5 5/32	3 29/32	5 1/16	6 3/8	4 11/16	5 5/32	2 9/32	3 3/16	331
40000110	10	3 13/16 - 4	35 7/16	22 27/32	7 1/8	5	6 5/8	7 9/16	5 15/16	7 1/8	2 15/16	4 3/32	849

Tolerance: Forged parts ± 5%

18-06-2012

Material	:	Alloy steel
Safety factor	:	≤ 300 ton: 5 times > 300 ton: 4 times
Standards	:	Generally according to EN 1677-4
Finish	:	Painted
Temperature range	:	-20°C up to +200°C
Standard certification	:	Certificate of Conformity 3.1 material certificate EN 10204

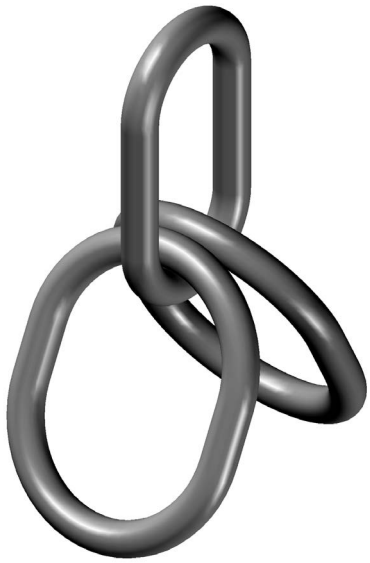

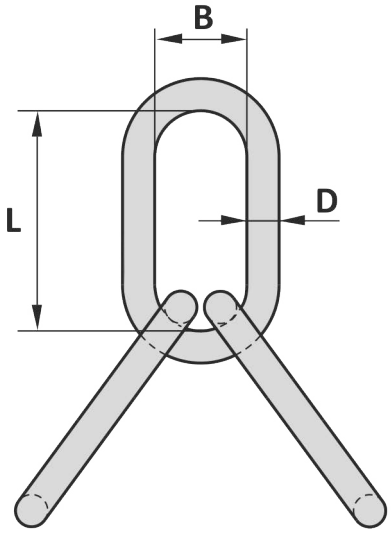

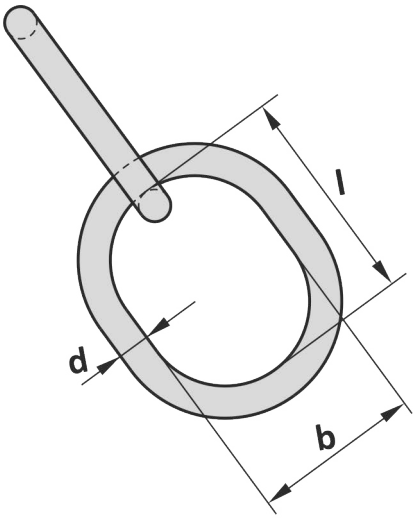

Art. No.	WLL ton	MBL ton	D mm	L mm	B mm	d mm	l mm	b mm	Weight kg
58000070	70	350	68	460	220	68	430	300	117
58000100	100	500	80	500	250	80	460	330	178
58000125	125	625	90	560	270	90	500	330	249
58000175	175	875	100	600	270	100	560	330	330
58000250	250	1250	115	600	400	115	600	400	505
58000300	300	1500	115	600	300	115	600	400	492
58000350	350	1400	115	600	270	115	600	400	480
58000400	400	1600	115	600	270	115	600	300	460

Tolerance: Forged parts ± 5%

Art. No.	WLL ton	MBL ton	D inch	L inch	B inch	d inch	l inch	b inch	Weight lbs
58000070	70	350	2 1/16	18 1/8	8 21/32	2 1/16	16 15/16	11 13/16	258
58000100	100	500	3 5/32	19 11/16	9 27/32	3 5/32	18 1/8	13	392
58000125	125	625	3 9/16	22 1/16	10 5/8	3 9/16	19 11/16	13	549
58000175	175	875	3 15/16	23 5/8	10 5/8	3 15/16	22 1/16	13	728
58000250	250	1250	4 17/32	23 5/8	15 3/4	4 17/32	23 5/8	15 3/4	1113
58000300	300	1500	4 17/32	23 5/8	11 13/16	4 17/32	23 5/8	15 3/4	1085
58000350	350	1400	4 17/32	23 5/8	10 5/8	4 17/32	23 5/8	15 3/4	1058
58000400	400	1600	4 17/32	23 5/8	10 5/8	4 17/32	23 5/8	11 13/16	1014

Tolerance: Forged parts ± 5%

18-03-2016

CHAIN ADAPTER WITH SPECIAL END LINK TYPE SC7

Material	:	Alloy steel, Grade R4/R5
Finish	:	Painted
Temperature range	:	-20°C up to +200°C
Standard certification	:	Certificate of Conformity 3.1 material certificate EN 10204

Non-standard sizes or custom products available on request

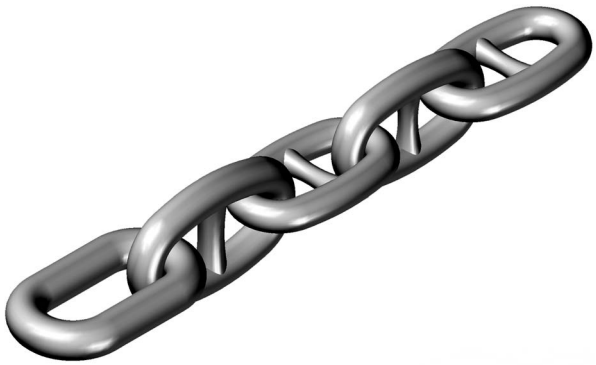

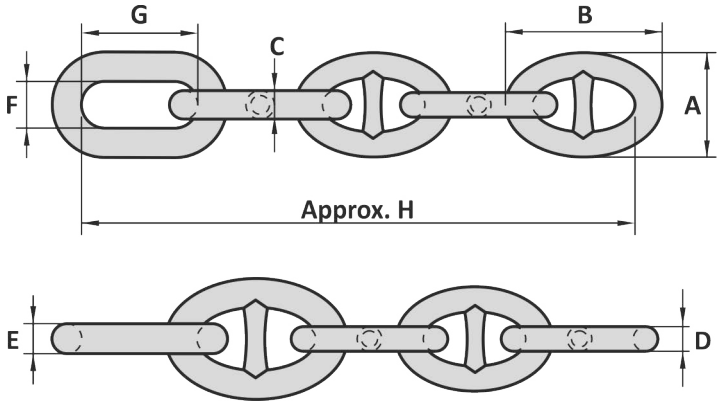

Art. No.	Chain inch	D mm	A mm	B mm	C mm	E mm	F mm	G mm	H mm	Weight kg
59999997	3	76	274	456	84	91	200	460	1706	234
59999998	3 ¼	84	302	504	105	116	200	460	1928	393

Tolerance: ± 5%

Art. No.	Chain inch	D inch	A inch	B inch	C inch	E inch	F inch	G inch	H inch	Weight lbs
59999997	3	3	10 25/32	17 15/16	3 5/16	3 19/32	7 7/8	18 1/18	67 5/32	714
59999998	3 ¼	3 5/16	11 7/8	19 27/32	4 1/8	4 9/16	7 7/8	18 1/8	75 29/32	866

Tolerance: ± 5%

28-11-2017

Material	:	Alloy steel, Grade R3/R3S/R4/R4S/R5
Finish	:	Painted
Temperature range	:	-40°C up to +200°C, Polar Rated
Standard certification	:	Certificate of Conformity 3.1 material certificate EN 10204

Non-standard sizes or custom products available on request

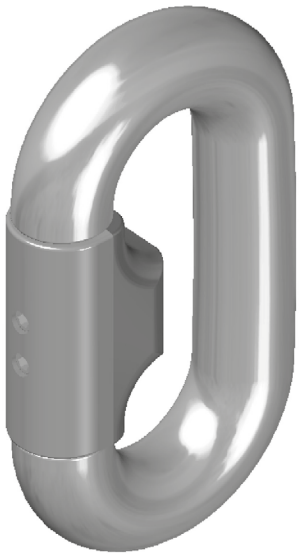

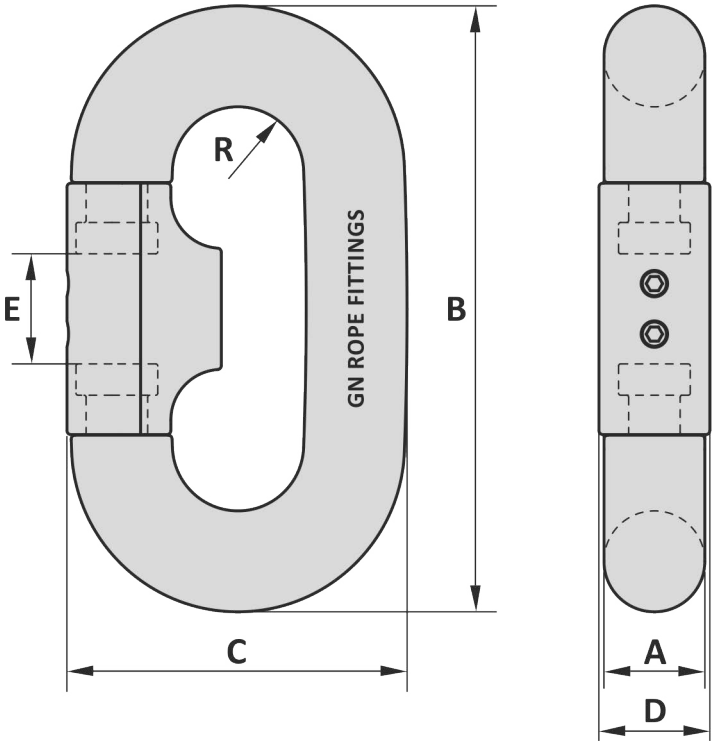

Dimensions for shackles are calculated by multiplying the common link size by the factor shown below

Dimensions related to nominal chain diameter
A = 1.00 x chain diameter
B = 6.00 x chain diameter
C = 3.37 x chain diameter
D = 1.10 x chain diameter
E = 1.09 x chain diameter
R = 0.65 x chain diameter

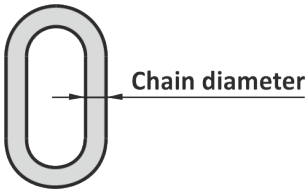

Tolerance: Machined parts ± 1 mm

17-09-2015

Material	:	Alloy steel Hardness less than 35 HRC / 328 HB Yield strength less than 950 MPa
Safety factor	:	4 times
Finish	:	Painted
Temperature range	:	-40°C up to +200°C, Polar Rated
Standard certification	:	Certificate of Conformity 3.1 material certificate EN 10204

Non-standard sizes or custom products available on request

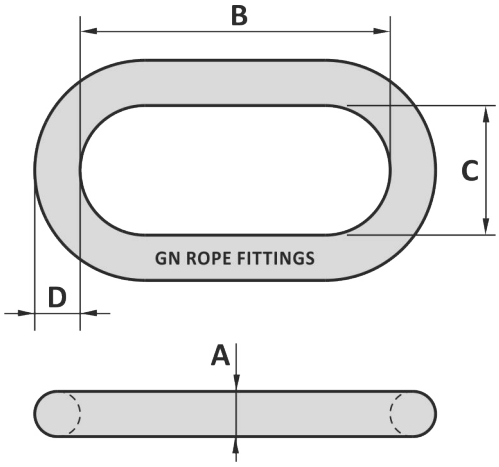

Art. No.	WLL ton	MBL ton	A mm	B mm	C mm	D mm	Weight kg
12910055	55	220	65	400	200	80	39
12910085	85	340	85	450	250	100	76
12910125	125	500	95	450	250	110	95
12910150	150	600	115	450	300	130	153
12910200	200	800	125	500	300	145	198
12910250	250	1000	135	600	300	155	257
12910300	300	1200	145	600	300	175	312
12916000	400	1600	155	800	400	205	480
12917000	500	2000	175	800	400	220	603
12918000	600	2400	195	800	400	230	732
12918100	700	2800	200	850	400	235	795
12918200	800	3200	210	850	400	245	881
12918300	900	3600	230	900	400	270	1119
12918400	1000	4000	240	900	400	280	1226
12918500	1250	5000	260	1000	400	310	1579
12918600	1500	6000	270	1000	400	320	1712

Tolerance: Forged parts ± 5%

Art. No.	WLL ton	MBL ton	A inch	B inch	C inch	D inch	Weight lbs
12910055	55	220	2 9/16	15 3/4	7 7/8	3 5/32	86
12910085	85	340	3 11/32	17 23/32	9 27/32	3 15/16	168
12910125	125	500	3 3/4	17 23/32	9 27/32	4 5/16	209
12910150	150	600	4 17/32	17 23/32	11 13/16	5 1/8	337
12910200	200	800	4 15/16	19 11/16	11 13/16	5 23/32	437
12910250	250	1000	5 5/16	23 5/8	11 13/16	6 3/32	567
12910300	300	1200	5 23/32	23 5/8	11 13/16	6 7/8	688
12916000	400	1600	6 3/32	31 1/2	15 3/4	8 1/16	1058
12917000	500	2000	6 7/8	31 1/2	15 3/4	8 21/32	1329
12918000	600	2400	7 11/16	31 1/2	15 3/4	9 1/16	1614
12918100	700	2800	7 7/8	33 15/32	15 3/4	9 1/4	1753
12918200	800	3200	8 1/4	33 15/32	15 3/4	9 21/32	1942
12918300	900	3600	9 1/16	35 7/16	15 3/4	10 5/8	2467
12918400	1000	4000	9 7/16	35 7/16	15 3/4	11 1/32	2703
12918500	1250	5000	10 1/4	39 3/8	15 3/4	12 3/16	3481
12918600	1500	6000	10 5/8	39 3/8	15 3/4	12 19/32	3774

Tolerance: Forged parts ± 5%

01-08-2016

NOTES

SW1
Closed body swivel

SW2
CR chain swivel

SW3
CR rope swivel

SW4
CR-D chain swivel

SW5
CR-D rope swivel

SW6
CR-X mooring swivel

SW7
Deepwater heavy duty swivel

Application information

Swivels are used in lifting, mooring, and anchoring applications. All our swivels can be designed with roller, trust, plain and low friction bearings, depending on the application of use. Next our standard design in this catalogue, special dimensions and special designs are possible.

SW 1 Closed body swivels are used mainly for rigging and lifting application for non-permanent applications, These swivels are made with a roller bearing. On request we can modify these for subsea use.
SW2/SW3 CR swivels, Chain and Rope are mainly used in anchor lines between rope and chain, these swivels are designed for subsea use and have plain bearings. Our CR-Connector links are the perfect fit to the chain or socket.
SW4/SW5 CR-D swivels are special design for easy handling and connecting. The removable clamp can be mounted to the chain or socket without using kenter shackles, or other connectors.

Instructions for use

Swivels are design for in-line loads, side loads are not acceptable and will damage the bearings. Roller bearings can be used under load, where plain bearings are mainly used for positioning installation loads. Make sure for swivels with jaw and safety pin the proper use of the nut and split pin. If the jaw gap is wider as the connecting part, use spacer to have a proper center load. Before use make sure the swivel is greased. After use subsea make sure the swivel is inspected and greased before re-use or storage. Maintenance for swivels by a expert is recommended every 2 years, with a maximum of 4 years.

Inspection

Inspection should take place at least every six months and even more frequently when the swivels are used in severe operating conditions.
Swivels should be inspected before use to ensure that:
- All markings are legible
- Swivel rotate freely
- Check swivels are undamaged on free of dirt
- Never use a safety bolt type swivel without using a securing pin
- Swivels may not be heat treated as this may affect their Working Load Limit and damage the bearings

Markings

As minimum the following markings
must be hard stamped in the shackle:
- Applicable Working load or Proof load
- Brand mark
- Production number

CLOSED BODY SWIVEL

TYPE SW1

Material : High tensile steel
Safety factor : 5 times
Finish : Painted
Temperature range : -4°F up to +392°F
Standard certification : Certificate of Conformity
3.1 material certificate EN 10204

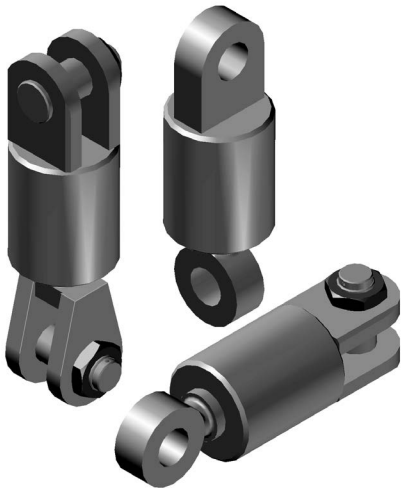

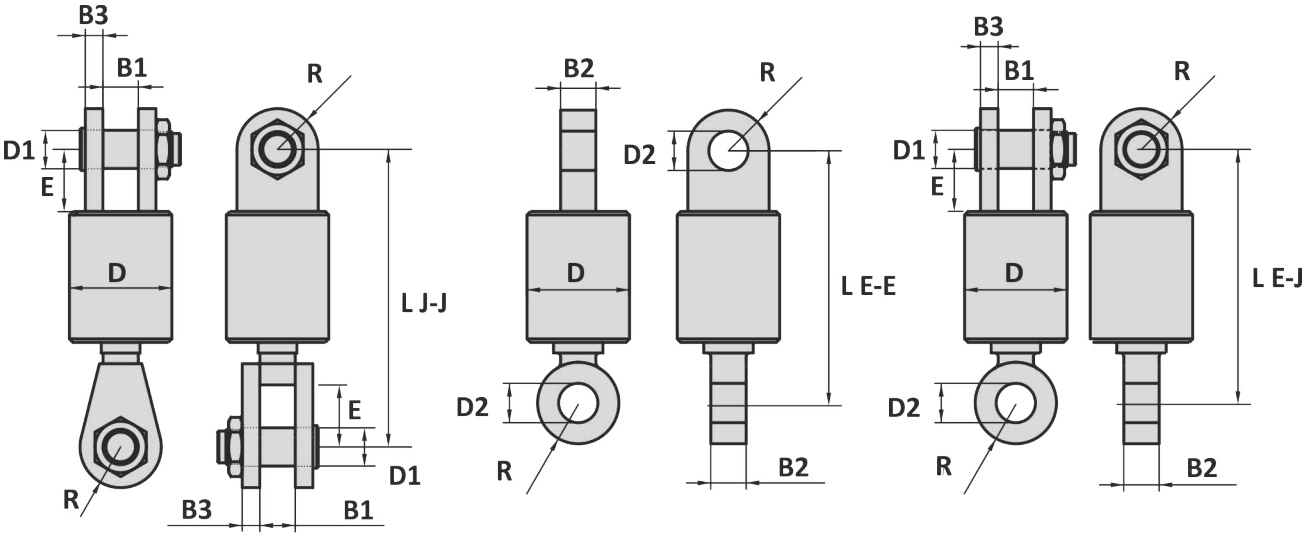

Jaw - Jaw | Eye - Eye | Eye - Jaw

Art. No. Jaw-Jaw	Art. No. Eye-Eye	Art. No. Eye-Jaw	WLL	B1	B2	B3	D1	D2	D	E	L J-J	L E-E	L E-J	R	Weight J-J	Weight E-E	Weight E-J
			ton	inch	inch	inch	inch	inch	inch	inch	inch	inch	inch	inch	lbs	lbs	lbs
40110017	40115017	40119017	17	2 9/16	2 5/32	1 3/32	2 15/32	2 9/16	6 11/16	5 1/8	18 29/32	16 1/8	18 29/32	2 3/4	130	97	121
40110025	40115025	40119025	25	3	2 3/4	1 3/16	2 3/4	2 27/32	7 15/32	5 23/32	22 1/4	17 23/32	21 1/16	2 3/4	185	141	170
40110035	40115035	40119035	35	3 9/16	3 5/32	1 9/16	3 5/32	3 7/32	9 27/32	6 7/8	27 5/32	21 1/4	25 3/8	3 11/32	370	293	344
40110055	40115055	40119055	55	4 5/16	3 15/16	1 31/32	3 15/16	4 1/16	10 5/8	6 7/8	31 1/2	27 5/32	30 29/32	4 1/8	604	470	560
40110070	40115070	40119070	70	4 5/16	3 15/16	2 5/32	4 1/4	4 3/8	11 13/32	6 11/16	31 7/8	27 9/16	31 7/8	4 17/32	712	556	606
40110085	40115085	40119085	85	5 1/8	4 23/32	2 15/16	5	5 1/8	13 25/32	6 7/8	34 1/4	32 11/16	33 21/32	5 5/16	1166	891	988
40110120	40115120	40119120	120	6 3/32	5 1/2	3 9/16	6	6 3/32	16 15/16	7 15/32	35 1/32	36 7/32	36 13/32	6 11/16	1876	1462	1618
40110150	40115150	40119150	150	6 11/16	6 5/16	3 15/16	7	7 1/8	18 1/2	8 1/4	39 1/2	37 13/16	40 7/8	7 15/32	2579	1967	2183
40110200	40115200	40119200	200	7 15/32	6 11/16	4 5/16	7 15/32	7 19/32	20 7/8	9 27/32	45 9/32	41 3/4	46 7/16	8 21/32	3805	2698	3139
40110250	40115250	40119250	250	8 1/4	7 15/32	4 23/32	9 27/32	9 31/32	23 5/8	11 1/32	48 13/16	46 1/16	51 3/16	10 1/4	5703	3829	4608
40110300	40115300	40119300	300	9 27/32	7 15/32	6 7/8	11 13/32	11 17/32	29 17/32	11 13/16	53 5/32	50 3/8	56 11/16	11 13/16	9524	6105	7579

Tolerance: ± 5%, machined parts ± 1/32 inch

12-07-2017

Material : High tensile steel
Safety factor : 5 times
Finish : Painted
Temperature range : -20°C up to +200°C
Standard certification : Certificate of Conformity
3.1 material certificate EN 10204

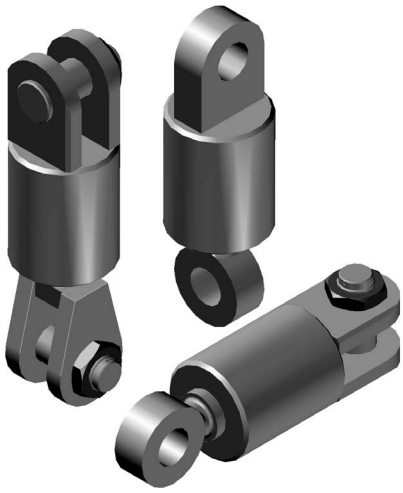

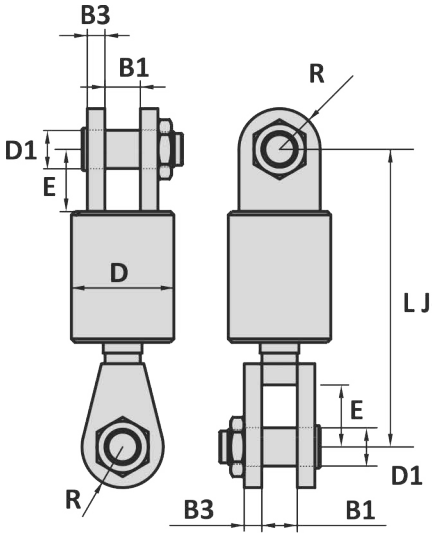

Jaw - Jaw

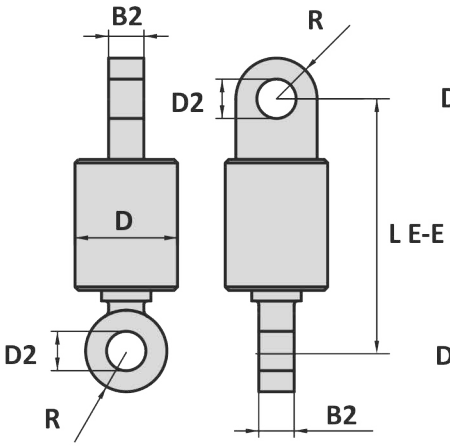

Eye - Eye

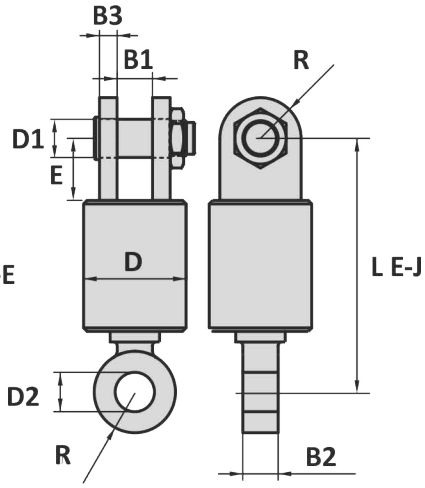

Eye - Jaw

Art. No. Jaw-Jaw	Art. No. Eye-Eye	Art. No. Eye-Jaw	WLL	B1	B2	B3	D1	D2	D	E	L J-J	L E-E	L E-J	R	Weight J-J	Weight E-E	Weight E-J
			ton	mm	mm	mm	mm	mm	mm	mm	mm	mm	mm	mm	kg	kg	kg
40110017	40115017	40119017	17	65	55	28	63	65	170	130	480	410	480	70	59	44	55
40110025	40115025	40119025	25	76	70	30	70	72	190	145	565	450	535	70	84	64	77
40110035	40115035	40119035	35	90	80	40	80	82	250	175	690	540	645	85	168	133	156
40110055	40115055	40119055	55	110	100	50	100	103	270	175	800	690	785	105	274	213	254
40110070	40115070	40119070	70	110	100	55	108	111	290	170	810	700	810	115	323	252	275
40110085	40115085	40119085	85	130	120	75	127	130	350	175	870	830	855	135	529	404	448
40110120	40115120	40119120	120	155	140	90	152	155	430	190	890	920	925	170	851	663	734
40110150	40115150	40119150	150	170	160	100	178	181	470	210	1003	960	1038	190	1170	892	990
40110200	40115200	40119200	200	190	170	110	190	193	530	250	1150	1060	1180	220	1726	1224	1424
40110250	40115250	40119250	250	210	190	120	250	253	600	280	1240	1170	1300	260	2587	1737	2090
40110300	40115300	40119300	300	250	190	175	290	293	750	300	1350	1280	1440	300	4320	2769	3438

Tolerance: ± 5%, machined parts ± 1 mm

12-07-2017

CR CHAIN SWIVEL

TYPE SW2

Material	:	Alloy steel
Safety factor	:	5 times
Finish	:	Painted
Temperature range	:	-20°C up to +200°C
Standard certification	:	Certificate of Conformity

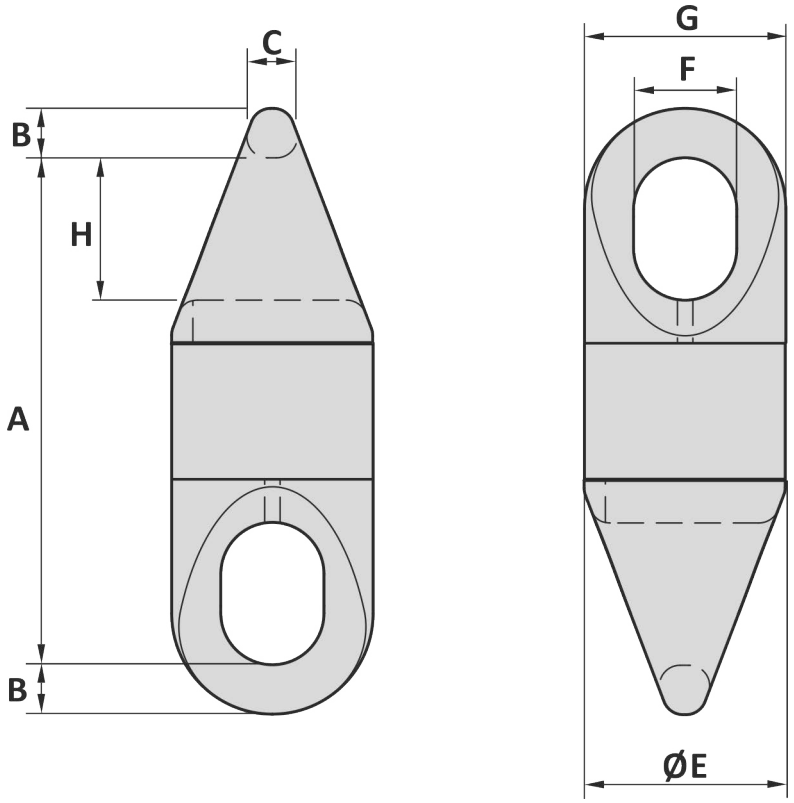

Art. No.	Size inch	WLL ton	MBL ton	A mm	B mm	C mm	E mm	F mm	G mm	H mm	Weight kg
47020250	2	50	250	610	55	50	200	115	200	165	130
47020300	2 ¼	60	300	700	65	57	225	135	230	195	152
47020400	2 ½	80	400	710	75	65	250	150	270	205	180
47020600	3	120	600	805	85	75	300	175	342	240	295
47020800	3 ½	160	800	945	105	95	330	205	360	285	412
47020900	4	180	900	1065	110	100	360	225	380	320	520

Tolerance: ± 5%

Art. No.	Size inch	WLL ton	MBL ton	A inch	B inch	C inch	E inch	F inch	G inch	H inch	Weight lbs
47020250	2	50	250	24	2 5/32	1 31/32	7 7/8	4 17/32	7 7/8	6 ½	287
47020300	2 ¼	60	300	27 9/16	2 9/16	2 ¼	8 7/8	5 5/16	9 1/16	7 11/16	335
47020400	2 ½	80	400	27 15/16	2 15/16	2 9/16	9 27/32	5 29/32	10 5/8	8 1/16	397
47020600	3	120	600	31 11/16	3 11/32	2 15/16	11 13/16	6 7/8	13 15/32	9 7/16	650
47020800	3 ½	160	800	37 3/16	4 1/8	3 ¾	12	8 1/16	14 3/16	11 7/32	908
47020900	4	180	900	41 15/16	4 5/16	3 15/16	14 3/16	8 7/8	14 31/32	12 19/32	1146

Tolerance: ± 5%

26-06-2015

Material : Alloy steel
Safety factor : 5 times
Finish : Painted
Temperature range : -20°C up to +200°C
Standard certification : Certificate of Conformity

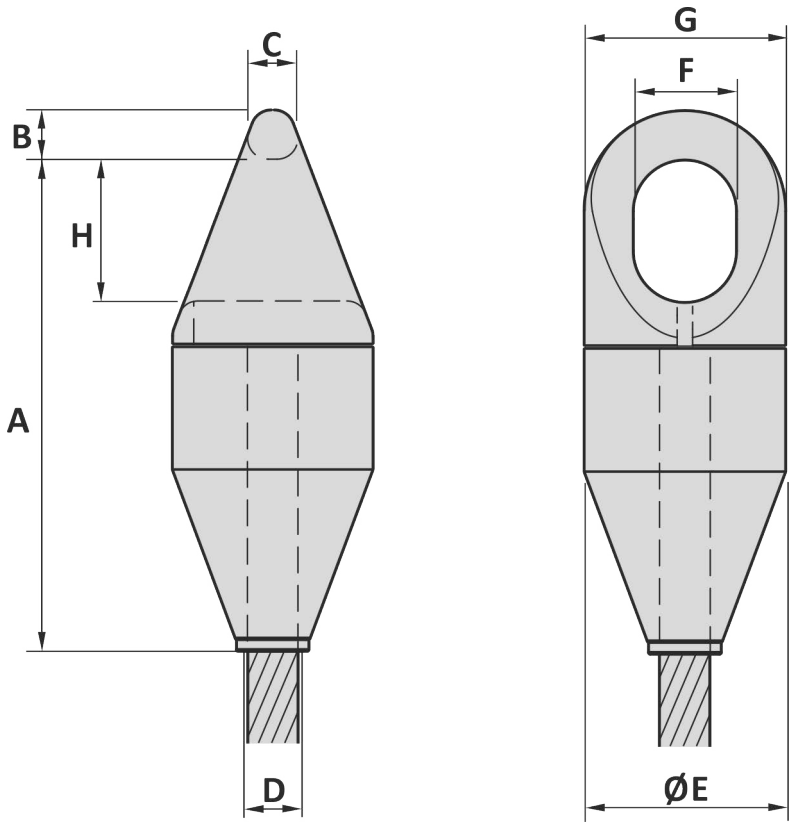

Art. No.	Size inch	Rope dia mm	WLL ton	MBL ton	A mm	B mm	C mm	D mm	E mm	F mm	G mm	H mm	Weight kg
47030250	2	40 - 54	50	250	635	55	50	57	220	115	220	165	117
47030300	2 ¼	55 - 60	60	300	690	65	57	63	238	135	230	195	138
47030400	2 ½	61 - 72	80	400	720	75	65	75	250	150	270	205	165
47030600	3	73 - 84	120	600	835	85	75	86	300	175	342	240	245
47030800	3 ½	85 - 93	160	800	965	105	95	101	330	205	360	285	345
47030900	4	94 - 105	180	900	1060	110	100	108	365	225	380	320	485

Tolerance: ± 5%

Art. No.	Size inch	Rope dia inch	WLL ton	MBL ton	A inch	B inch	C inch	D inch	E inch	F inch	G inch	H inch	Weight lbs
47030250	2	1 9/16 - 2 ⅛	50	250	25	2 5/32	1 31/32	2 ¼	8 21/32	4 17/32	8 21/32	6 ½	258
47030300	2 ¼	2 5/32 - 2 ⅜	60	300	27 5/32	2 9/16	2 ¼	2 15/32	9 ⅜	5 5/16	9 1/16	7 11/16	304
47030400	2 ½	2 13/32 - 2 27/32	80	400	28 11/32	2 15/16	2 9/16	2 15/16	9 27/32	5 29/32	10 ⅝	8 1/16	364
47030600	3	2 ⅞ - 3 5/16	120	600	32 ⅞	3 11/32	2 15/16	3 ⅜	11 13/16	6 ⅞	13 15/32	9 7/16	540
47030800	3 ½	3 11/32 - 3 21/32	160	800	38	4 ⅛	3 ¾	3 31/32	13	8 1/16	14 3/16	11 7/32	761
47030900	4	3 11/16 - 4 ⅛	180	900	41 ¾	4 5/16	3 15/16	4 ¼	14 ⅜	8 ⅞	14 31/32	12 19/32	1069

Tolerance: ± 5%

26-06-2015

CR-D CHAIN SWIVEL

TYPE SW4

Material : Alloy steel
Safety factor : 5 times
Finish : Painted
Temperature range : -20°C up to +200°C
Standard certification : Certificate of Conformity

Suitable for use common studless links and end links
Non-standard sizes or custom products available on request

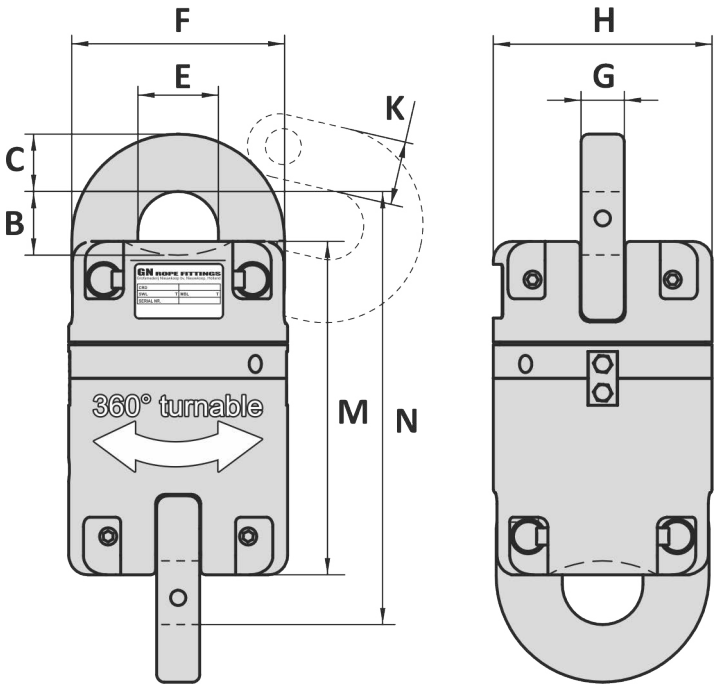

Art. No.	Type No.	Suitable chain	WLL ton	MBL ton	B mm	C mm	E mm	F mm	G mm	H mm	K mm	M mm	N mm	Weight kg
47040250	822	2	50	250	70	60	84	222	45	238	69	348	452	114
47040600	828	3	120	600	120	100	112	340	70	378	114	513	684	437
47040800	830	3 ½	160	800	152	120	140	400	80	420	130	600	840	624

Tolerance: ± 5%, machined parts ± 1 mm

Art. No.	Type No.	Suitable chain	WLL ton	MBL ton	B inch	C inch	E inch	F inch	G inch	H inch	K inch	M inch	N inch	Weight lbs
47040250	822	2	50	250	2 ¾	2 ⅜	3 5/16	8 ¾	1 25/32	9 ⅜	2 23/32	13 11/16	17 13/16	251
47040600	828	3	120	600	4 23/32	3 15/16	4 13/32	13 ⅜	2 ¾	14 ⅞	4 ½	20 3/16	26 15/16	963
47040800	830	3 ½	160	800	6	4 23/32	5 ½	15 ¾	3 5/32	16 17/32	5 ⅛	23 ⅝	33 1/16	1376

Tolerance: ± 5%, machined parts ± 1/32 inch

09-05-2014

Material : Alloy steel
Safety factor : 5 times
Finish : Painted
Temperature range : -20°C up to +200°C
Standard certification : Certificate of Conformity

Suitable for use common studless links and end links
Non-standard sizes or custom products available on request

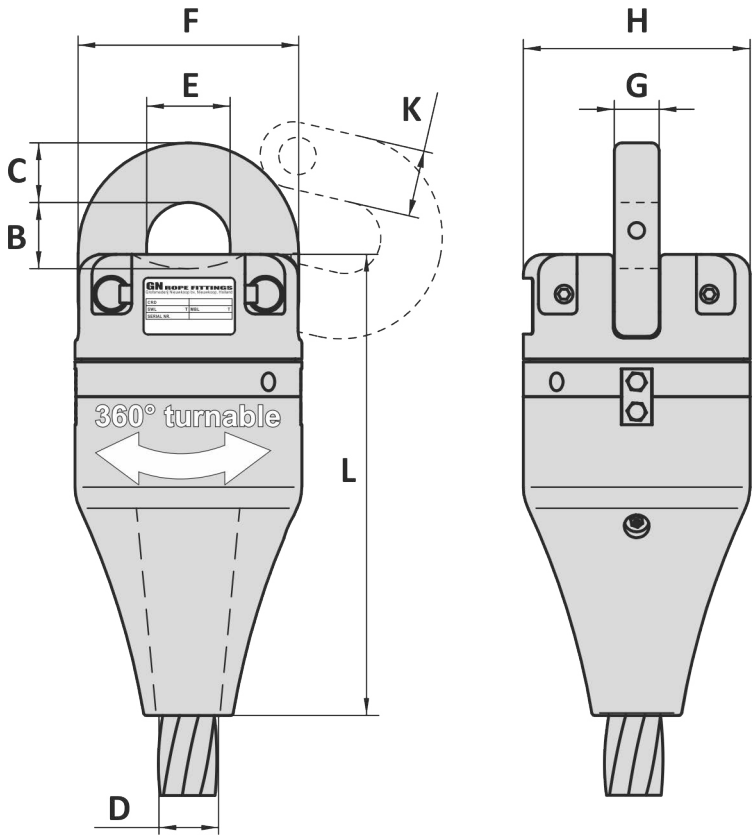

Art. No.	Type No.	Wire dia inch	Suitable chain	WLL ton	MBL ton	B mm	C mm	D mm	E mm	F mm	G mm	H mm	K mm	L mm	Weight kg
47050250	722	2 - 2 ¼	2	50	250	70	60	59	84	222	45	238	69	463	102
47050600	728	3 - 3 ¼	3	120	600	120	100	86	112	340	70	378	114	678	386
47050800	730	3 ½ - 3 ¾	3 ½	160	800	152	120	99	140	400	80	420	130	770	561

Tolerance: ± 5%, machined parts ± 1 mm

Art. No.	Type No.	Wire dia inch	Suitable chain	WLL ton	MBL ton	B inch	C inch	D inch	E inch	F inch	G inch	H inch	K inch	L inch	Weight lbs
47050250	722	2 - 2 ¼	2	50	250	2 ¾	2 ⅜	2 5/16	3 5/16	8 ¾	1 25/32	9 ⅜	2 23/32	18 7/32	225
47050600	728	3 - 3 ¼	3	120	600	4 23/32	3 15/16	3 ⅜	4 13/32	13 ⅜	2 ¾	14 ⅞	4 ½	26 11/16	851
47050800	730	3 ½ - 3 ¾	3 ½	160	800	6	4 23/32	3 29/32	5 ½	15 ¾	3 5/32	16 17/32	5 ⅛	30 5/16	1237

Tolerance: ± 5%, machined parts ± 1/32 inch

04-12-2014

CR-X MOORING SWIVEL

TYPE SW6

Material : Alloy steel, Grade R4/R5
Grade : R4/R5
Finish : Painted
Temperature range : -20°C up to +200°C
Standard certification : Certificate of Conformity
3.1 material certificate EN 10204

TYPE APPROVED PRODUCT
DNV·GL
OS E302

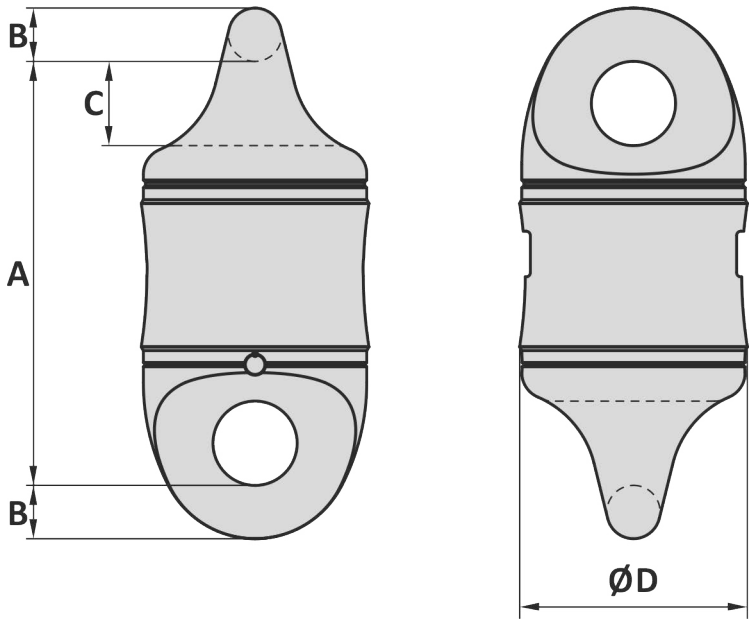

Art. No.	Size inch	Kenter inch	R4 PL kN	R4 MBL kN	R5 PL kN	R5 MBL kN	A mm	B mm	C mm	D mm	Weight kg
47060400	2 ½	2 ½ - 3	3440	4364	3997	5096	540	64	100	275	187
47060600	3	3 - 3 ½	4731	6001	5498	7009	605	76	120	325	284
47060800	3 ½	3 ½ - 4	6310	8004	7332	9348	670	89	140	380	427

Tolerance: ± 5%, machined parts ± 1 mm

Art. No.	Size inch	Kenter inch	R4 PL kN	R4 MBL kN	R5 PL kN	R5 MBL kN	A inch	B inch	C inch	D inch	Weight lbs
47060400	2 ½	2 ½ - 3	3440	4364	3997	5096	21 ¼	2 ½	3 15/16	10 13/16	412
47060600	3	3 - 3 ½	4731	6001	5498	7009	23 13/16	3	4 23/32	12 13/16	626
47060800	3 ½	3 ½ - 4	6310	8004	7332	9348	26 ⅜	3 ½	5 ½	14 31/32	941

Tolerance: ± 5%, machined parts ± 1/32 inch

04-01-2017

STEVPRIS MK6

EPAL
105
EPAL

DEEPWATER HEAVY DUTY SWIVEL

TYPE SW7

Material : Alloy steel
Safety factor : 5 times
Finish : Painted
Temperature range : -40°C up to +200°C
Standard certification : Certificate of Conformity
3.1 material certificate EN 10204

Non-standard sizes or custom products available on request

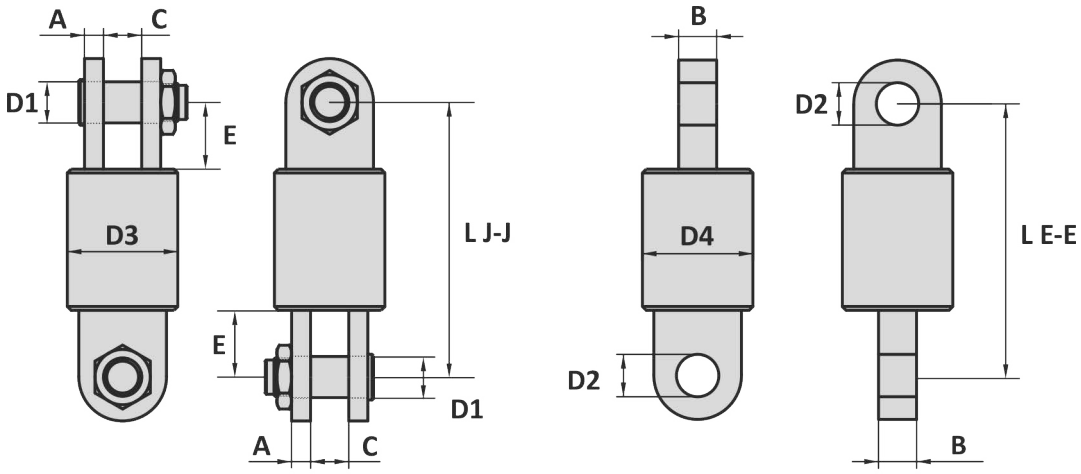

Jaw - Jaw

Eye - Eye

Art. No. Jaw-Jaw	Art. No. Eye-Eye	Art. No. Eye-Jaw	WLL	A	B	C	D1	D2	D3	D4	E	L J-J	L E-E	L E-J	Weight J-J	Weight E-E	Weight E-J
			ton	inch	inch	inch	inch	inch	inch	inch	inch	inch	inch	inch	lbs	lbs	lbs
40110010	40115010	40119010	9.5	5/8	1 1/4	1 31/32	1 1/4	1 13/32	4 15/16	4 15/16	1 31/32	10 9/16	10 9/16	10 9/16	46	42	44
40110014	40115014	40119014	13.5	7/8	1 21/32	2 3/8	1 1/2	1 3/4	5 1/8	5 1/8	2 3/4	12 5/16	12 5/16	12 5/16	60	51	55
40110018	40115018	40119018	17	1	1 7/8	2 15/32	1 21/32	2 1/16	5 1/2	5 1/2	2 9/16	12 5/16	12 5/16	12 5/16	73	62	68
40110026	40115026	40119026	25	1 1/32	2 5/32	3 1/16	1 31/32	2 1/8	5 29/32	5 29/32	2 9/16	12 29/32	12 13/16	12 7/8	90	71	82
40110036	40115036	40119036	35	1 3/8	2 3/4	3 9/16	2 1/4	2 3/8	7 3/32	6 11/16	2 15/16	14 7/8	14 7/8	14 7/8	146	115	130
40110056	40115056	40119056	55	1 9/16	3 1/16	4 5/16	2 3/4	2 29/32	8 21/32	7 7/8	3 15/16	18 5/8	18 5/8	18 5/8	262	196	229
40110086	40115086	40119086	85	1 31/32	3 7/8	5 1/8	3 1/4	3 15/32	10 1/4	9 1/16	4 5/16	21 3/16	21 3/16	21 3/16	430	309	370
40110121	40115121	40119121	120	2 3/8	4 23/32	5 29/32	3 3/4	3 15/16	12 19/32	11 1/32	5 5/16	25 29/32	25 29/32	25 29/32	765	549	657
40110151	40115151	40119151	150	2 9/16	4 31/32	7 3/32	4 1/4	4 1/2	14 3/16	11 13/16	5 29/32	28 21/32	28 21/32	28 21/32	1038	708	873
40110201	40115201	40119201	200	2 3/4	5 29/32	6 5/16	4 15/16	5 1/8	14 3/16	13 25/32	6 11/16	34 7/16	34 1/16	34 1/4	1720	1206	1464
40110251	40115251	40119251	250	3 5/32	6 5/16	7 3/32	5 1/2	5 23/32	17 23/32	15 3/4	7 7/8	41 11/32	40 15/16	41 1/8	2469	1819	2145
40110301	40115301	40119301	300	3 9/16	6 7/8	7 11/16	5 29/32	6 3/32	19 9/32	18 29/32	8 15/32	46 21/32	46 1/4	46 7/16	3263	2866	3064
40110400	40115400	40119400	400	3 15/16	8 1/4	9 1/16	6 7/8	7 3/32	22 7/16	20 15/32	9 7/16	51 31/32	51 9/16	51 25/32	4883	3858	4372
40110500	40115500	40119500	500	4 23/32	9 1/4	10 1/32	7 9/32	7 15/32	24 13/16	20 15/32	9 27/32	53 3/4	53 11/32	53 9/16	6206	4145	5176
40110600	40115600	40119600	600	5 1/8	10 7/16	11 7/32	8 1/16	8 1/4	27 5/32	23 5/8	10 7/16	60 5/8	60 1/4	60 7/16	8642	6261	7452
40110700	40115700	40119700	700	5 1/2	11 13/32	12 3/16	8 9/16	8 3/4	29 1/8	23 5/8	11 1/32	62 19/32	62 3/16	62 13/32	10318	6735	8527
40110800	40115800	40119800	800	5 1/2	11 13/32	12 3/16	9 1/16	9 1/4	30 5/16	25 19/32	12	65 3/4	65 11/32	65 9/16	11640	8113	9877
40110900	40115900	40119900	900	5 29/32	12 3/16	13	9 27/32	10 1/32	32 9/32	27 15/16	12 19/32	70 15/32	70 1/16	70 9/32	14132	10196	12165
40111000	40115000	40119000	1000	6 1/2	13	13 25/32	10 5/8	10 13/16	34 21/32	27 15/16	13 3/16	72 7/16	72 1/16	72 1/4	16843	10714	13779
40111250	40115252	40119252	1250	6 7/8	13 25/32	14 9/16	11 13/16	12	38 3/16	31 3/32	14 3/4	78 15/16	78 9/16	78 3/4	22190	14308	18250
40111550	40115550	40119550	1550	6 7/8	13 25/32	14 9/16	12 19/32	12 13/16	39 3/8	33 1/16	16 3/4	83 21/32	83 1/4	83 15/32	26191	17185	21689
40111750	40115750	40119750	1750	8 1/16	16 1/8	16 15/16	14 3/16	14 3/8	44 7/8	35 1/32	17 5/16	88	87 19/32	87 13/16	34238	20756	27498

Tolerance: ± 5%, machined parts ± 1/32 inch

22-06-2018

DEEPWATER HEAVY DUTY SWIVEL

TYPE SW7

Material : Alloy steel
Safety factor : 5 times
Finish : Painted
Temperature range : -40°C up to +200°C
Standard certification : Certificate of Conformity
3.1 material certificate EN 10204

Non-standard sizes or custom products available on request

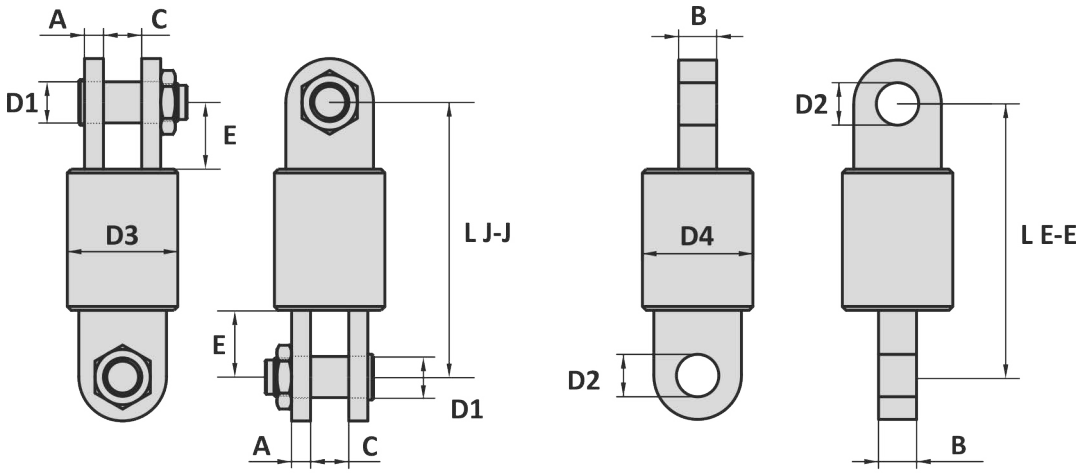

Jaw - Jaw

Eye - Eye

Art. No. Jaw-Jaw	Art. No. Eye-Eye	Art. No. Eye-Jaw	WLL	A	B	C	D1	D2	D3	D4	E	L J-J	L E-E	L E-J	Weight J-J	Weight E-E	Weight E-J
			ton	mm	mm	mm	mm	mm	mm	mm	mm	mm	mm	mm	kg	kg	kg
40110010	40115010	40119010	9.5	16	32	50	32	36	125	125	50	268	268	268	21	19	20
40110014	40115014	40119014	13.5	22	42	60	38	44	130	130	70	313	313	313	27	23	25
40110018	40115018	40119018	17	25	48	63	42	52	140	140	65	313	313	313	33	28	31
40110026	40115026	40119026	25	26	55	78	50	54	150	150	65	328	325	327	41	32	37
40110036	40115036	40119036	35	35	70	90	57	60	180	170	75	378	378	378	66	52	59
40110056	40115056	40119056	55	40	78	110	70	74	220	200	100	473	473	473	119	89	104
40110086	40115086	40119086	85	50	98	130	83	88	260	230	110	538	538	538	195	140	168
40110121	40115121	40119121	120	60	120	150	95	100	320	280	135	658	658	658	347	249	298
40110151	40115151	40119151	150	65	126	180	108	114	360	300	150	728	728	728	471	321	396
40110201	40115201	40119201	200	70	150	160	125	130	360	350	170	875	865	870	780	547	664
40110251	40115251	40119251	250	80	160	180	140	145	450	400	200	1050	1040	1045	1120	825	973
40110301	40115301	40119301	300	90	175	195	150	155	490	480	215	1185	1175	1180	1480	1300	1390
40110400	40115400	40119400	400	100	210	230	175	180	570	520	240	1320	1310	1315	2215	1750	1983
40110500	40115500	40119500	500	120	235	255	185	190	630	520	250	1365	1355	1360	2815	1880	2348
40110600	40115600	40119600	600	130	265	285	205	210	690	600	265	1540	1530	1535	3920	2840	3380
40110700	40115700	40119700	700	140	290	310	217	222	740	600	280	1590	1580	1585	4680	3055	3868
40110800	40115800	40119800	800	140	290	310	230	235	770	650	305	1670	1660	1665	5280	3680	4480
40110900	40115900	40119900	900	150	310	330	250	255	820	710	320	1790	1780	1785	6410	4625	5518
40111000	40115000	40119000	1000	165	330	350	270	275	880	710	335	1840	1830	1835	7640	4860	6250
40111250	40115252	40119252	1250	175	350	370	300	305	970	790	375	2005	1995	2000	10065	6490	8278
40111550	40115550	40119550	1550	175	350	370	320	325	1000	840	425	2125	2115	2120	11880	7795	9838
40111750	40115750	40119750	1750	205	410	430	360	365	1140	890	440	2235	2225	2230	15530	9415	12473

Tolerance: ± 5%, machined parts ± 1 mm

22-06-2018

NOTES

HK2
Eye hook (ROV)

HK3
Heavy duty pelican sliphook

HK4
Sliphook

HK5
ROV shank hook

HK6
Anchor line hook

HK12
KS hook

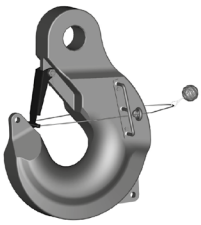

HK14
Softsling friendly ROV hook

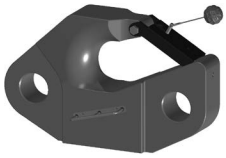

HK15
Softsling friendly ROV transfer hook

HK17
Softsling friendly ROV clevis hook

Application information

Hooks are used in towing, mooring and lifting systems as a connection between slings, rope, wire rope and chain.
ROV type hooks are modified for easy ROV handling during hook-up or release.

Eye hooks HK2 are generally used for lifting systems. The HK2 modified ROV type can be used subsea. Slip or pelican HK3 and HK4 hooks are generally used for towing systems as a quick release application. ROV shank hooks HK5 are specially designed for subsea use by ROV's. Due the shape and size of the shank the ROV has a perfect on the hook. Anchor line hooks HK6 are designed for release of anchor lines. Soft sling hooks HK14 are specially designed with an enlarged radius to protect the soft sling for bending damage, which improves the durability of the softsling. KS-hooks HK12 are used in mooring lines

Instructions for use

The hook must always support the load. The load must never be supported by the latch. Never use a hook whose throat opening has been increased or whose tip has been bent more than 10° out of the plane from the hook body or is in any other way distorted or bent. The latch will not work properly on a hook with a bent or worn tip. Never repair, alter rework or reshape a hook by welding, heating, burning or bending. When placing 2 sling legs in a hook, make sure that the angle between the legs does not exceed 90°.

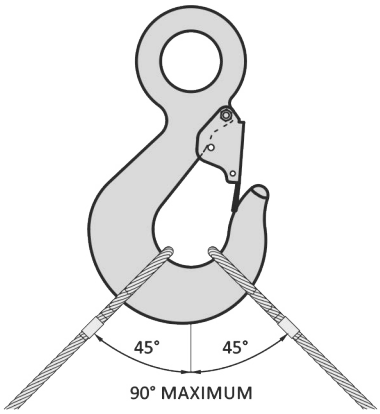

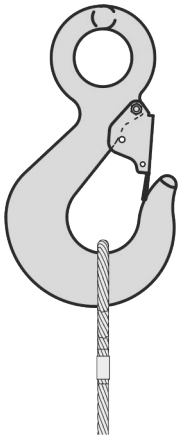

Right

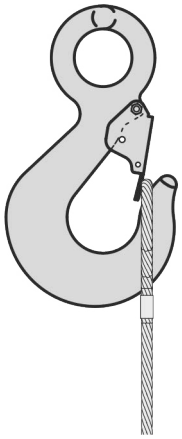

Wrong

Never side load, back load or tip load a hook.

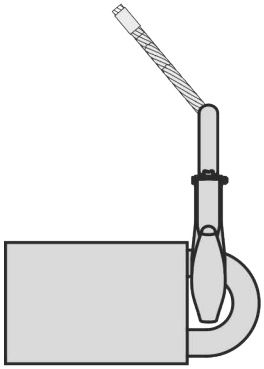

Wrong

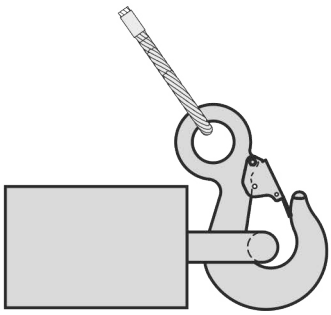

Wrong

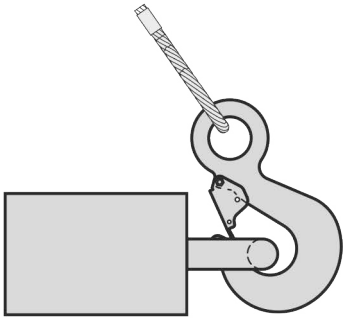

Wrong

Inspection

Inspection should take place at least every six months and even more frequently when the hooks are used in severe operating conditions.
Hooks should be inspected before use:

- Always inspect hook (and latch) before using
- Never use a hook whose throat opening has been increased or whose tip has been bent more than 10° out of the plane from the hook body or is in any other way distorted or bent
- Never use a latch that is distorted or bent
- Always make sure spring will force the latch against the tip of the hook
- Hooks may not be heat treated as this may affect their Working Load Limit
- Never modify, repair or reshape a hook by machining, welding, heating or bending as this may affect the Working Load Limit

Markings

As minimum the following markings must be hard stamped in the shackle.

- Applicable Working load or Proof load
- Brand mark
- Production number

EYE HOOK (ROV)

TYPE HK2

Material	:	Alloy steel
Safety factor	:	4 times
Finish	:	Painted
Temperature range	:	-40°F up to +392°F, Polar Rated
Standard certification	:	Certificate of Conformity 3.1 material certificate EN 10204

Spare latches available on request

Standard hook with safety latch **ROV-hook**

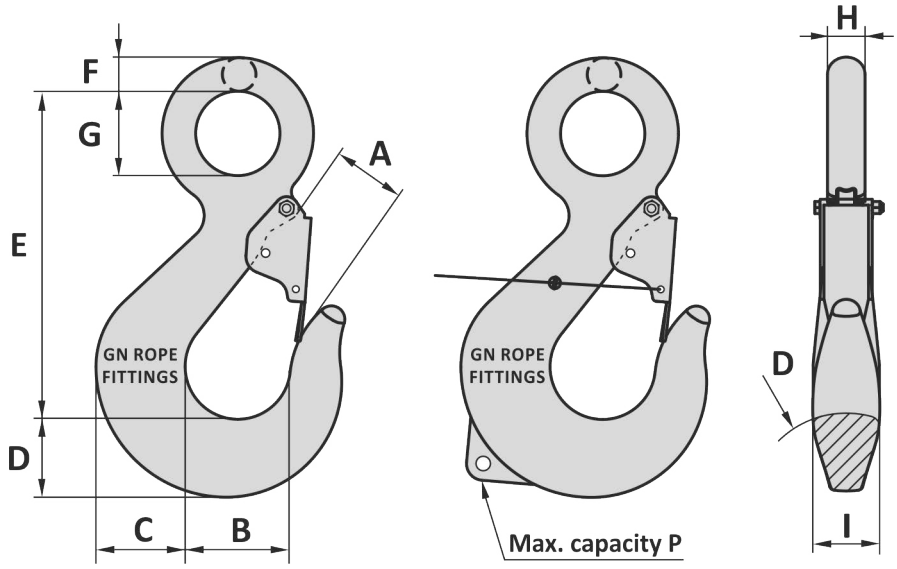

Art. No. standard	Art. No. ROV	WLL ton	MBL ton	A inch	B inch	C inch	D inch	E inch	F inch	G inch	H inch	I inch	P ton	Weight lbs
51000008	51000009	8	32	2 1/8	2 11/16	2 3/32	1 7/8	8	1	1 31/32	1	1 1/2		8.2
51000012	51000013	12.5	50	2 13/16	3 3/8	2 11/16	2 13/32	9 31/32	1 1/4	2 1/2	1 1/4	1 7/8		17
51000016	51000017	16	64	3 3/16	3 25/32	3	2 11/16	11 3/16	1 13/32	2 27/32	1 13/32	2 3/32		22
51000020	51000021	20	80	3 19/32	4 7/32	3 3/8	3	12 9/16	1 9/16	3 3/16	1 9/16	2 13/32		29
51000028	51000029	28	112	2 13/16	4 13/32	3 25/32	3 1/4	13 15/16	1 1/2	3 3/4	1 1/2	2 15/32		37
51000031	51000032	31	125	3 3/16	4 15/16	4 3/16	3 5/8	15 5/16	1 11/16	3 15/16	1 11/16	2 3/4		51
51000040	51000041	40	160	3 21/32	5 1/2	4 9/16	4 1/16	18	1 7/8	5 1/8	1 7/8	3 5/32		75
51000050	51000051	50	200	4 3/16	6 7/32	5 5/16	4 9/16	19 1/2	2 1/8	5 1/8	2 1/8	3 1/2		108
51000063	51000064	63	250	4 11/16	6 15/16	5 15/16	5 1/8	22 1/4	2 3/8	5 29/32	2 3/8	3 29/32		139
51000080	51000081	80	320	5 5/32	7 13/16	6 5/8	5 23/32	27 5/32	2 5/8	6 11/16	2 5/8	4 5/16		218
51000100	51000101	100	400	5 15/16	8 7/8	7 11/16	6 25/32	28 9/16	3 1/8	6 7/8	3 1/8	4 15/16	4.75	353
51000150	51000151	150	600	6 13/16	9 27/32	8 7/8	7 27/32	30 1/8	3 3/8	5 1/8	3 3/8	6 5/16	6.5	573
51000200	51000201	200	800	7 7/8	10 13/16	10 1/4	9 5/16	33 15/32	4	5 29/32	4	7 3/32	8.5	919
51000250	51000251	250	1000	9 3/16	12 3/16	11 13/32	10 19/32	36 17/32	4 23/32	6 11/16	4 23/32	7 7/8	9.5	1270
51000300	51000301	300	1200	10 3/8	13 25/32	13	12 3/16	41 13/32	5 1/2	7 15/32	5 1/2	8 21/32	12	1808
51000400	51000401	400	1600	11 15/16	15 3/4	14 31/32	13 9/16	47 1/16	6 11/16	8 1/4	6 11/16	9 7/16	17	2480
51000500	51000501	500	2000	14 9/16	17 23/32	16 1/8	15 11/32	53 9/16	7 7/8	8 15/32	7 7/8	12 19/32	17	4057

Tolerance: Forged parts ± 5%, machined parts ± 1/32 inch

25-08-2014

Material : Alloy steel
Safety factor : 4 times
Finish : Painted
Temperature range : -40°C up to +200°C, Polar Rated
Standard certification : Certificate of Conformity
3.1 material certificate EN 10204

Spare latches available on request

Standard hook with safety latch **ROV-hook**

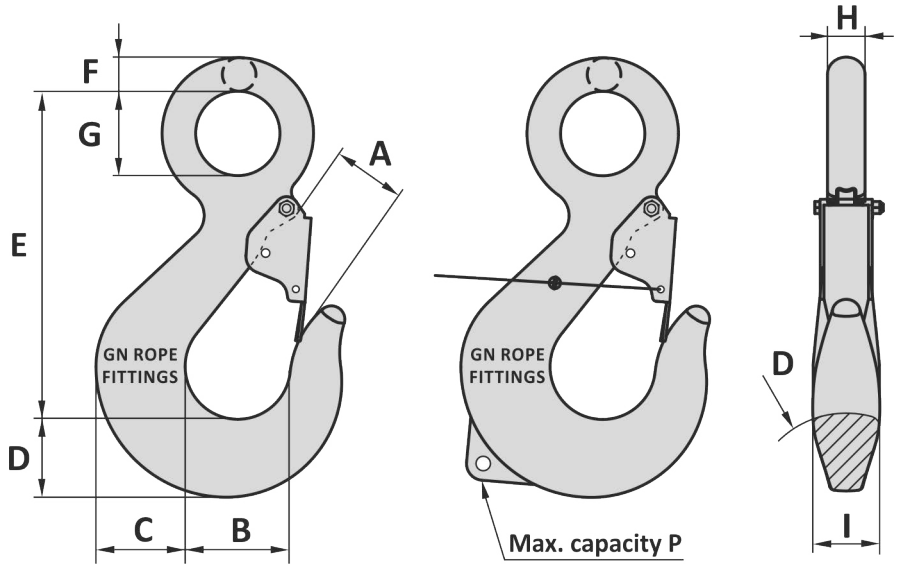

Art. No. standard	Art. No. ROV	WLL ton	MBL ton	A mm	B mm	C mm	D mm	E mm	F mm	G mm	H mm	I mm	P ton	Weight kg
51000008	51000009	8	32	54	68	53	48	203	25	50	25	38		3.7
51000012	51000013	12.5	50	71	86	68	61	253	32	64	32	48		7.6
51000016	51000017	16	64	81	96	76	68	284	36	72	36	53		10
51000020	51000021	20	80	91	107	86	76	319	40	81	40	61		13
51000028	51000029	28	112	71	112	96	83	354	38	95	38	63		17
51000031	51000032	31	125	81	125	106	92	389	43	100	43	70		23
51000040	51000041	40	160	93	140	116	103	457	48	130	48	80		34
51000050	51000051	50	200	106	158	135	116	495	54	130	54	89		49
51000063	51000064	63	250	119	176	151	130	565	60	150	60	99		63
51000080	51000081	80	320	131	198	168	145	690	67	170	67	110		99
51000100	51000101	100	400	151	225	195	172	725	79	175	79	125	4.75	160
51000150	51000151	150	600	173	250	225	199	765	86	130	86	160	6.5	260
51000200	51000201	200	800	200	275	260	237	850	102	150	102	180	8.5	417
51000250	51000251	250	1000	233	310	290	269	928	120	170	120	200	9.5	576
51000300	51000301	300	1200	264	350	330	310	1052	140	190	140	220	12	820
51000400	51000401	400	1600	303	400	380	344	1195	170	210	170	240	17	1125
51000500	51000501	500	2000	370	450	410	390	1360	200	215	200	320	17	1840

Tolerance: Forged parts ± 5%, machined parts ± 1 mm

25-08-2014

HEAVY DUTY PELICAN SLIPHOOK TYPE HK3

Material : High tensile steel
Safety factor : 5 times
Finish : Painted
Temperature range : -20°C up to +200°C
Standard certification : Certificate of Conformity

Non-standard sizes or custom products available on request

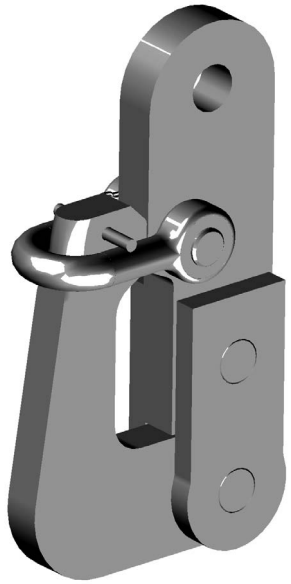

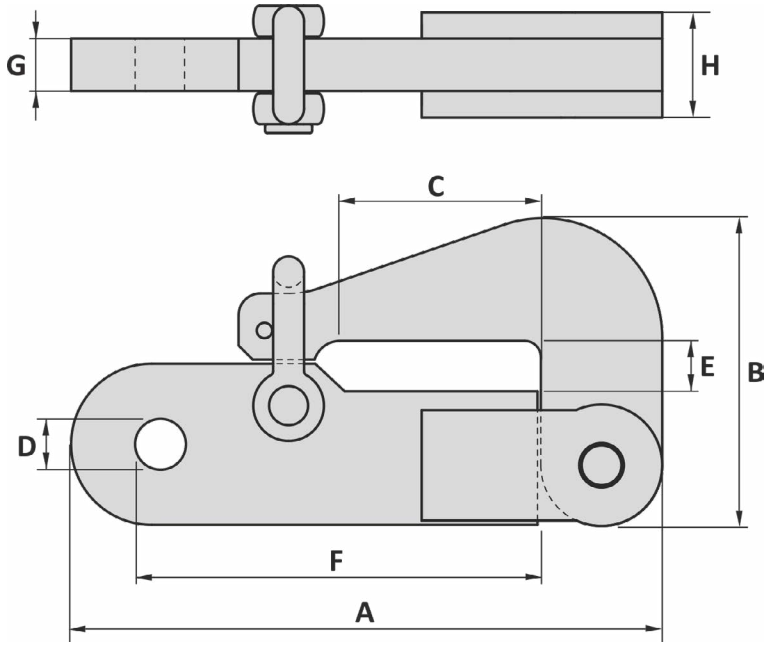

Art. No.	WLL ton	MBL ton	A mm	B mm	C mm	D mm	E mm	F mm	G mm	H mm	Weight kg
75000003	3.5	17.5	328	155	85	26	35	240	20	54	6.7
75000005	5	25	338	161	100	38	35	234	30	60	12
75000008	8	40	415	200	150	50	55	300	30	70	17
75000012	12.5	62.5	491	235	160	55	65	358	35	75	26
75000017	17	85	550	265	165	55	70	390	45	95	45
75000025	25	125	610	308	180	60	76	430	45	105	62
75000035	35	175	670	355	200	60	85	465	50	110	100
75000055	55	275	775	410	230	75	90	500	60	130	152
75000085	85	425	1020	490	310	103	110	704	100	200	352
75000120	120	600	1240	650	418	105	160	858	100	220	524
75000150	150	750	1308	710	482	115	180	919	100	240	616
75000200	200	1000	1477	790	550	130	200	1017	120	280	702

Tolerance: Forged parts ± 5%, machined parts ± 1 mm

Art. No.	WLL ton	MBL ton	A inch	B inch	C inch	D inch	E inch	F inch	G inch	H inch	Weight lbs
75000003	3.5	17.5	12 29/32	6 3/32	3 11/32	1 1/32	1 3/8	9 7/16	25/32	2 1/8	15
75000005	5	25	13 5/16	6 11/32	3 15/16	1 1/2	1 3/8	9 7/32	1 3/16	2 3/8	26
75000008	8	40	16 11/32	7 7/8	5 29/32	1 31/32	2 5/32	11 13/16	1 3/16	2 3/4	37
75000012	12.5	62.5	19 5/16	9 1/4	6 5/16	2 5/32	2 9/16	14 3/32	1 3/8	2 15/16	57
75000017	17	85	21 21/32	10 7/16	6 1/2	2 5/32	2 3/4	15 11/32	1 25/32	3 3/4	99
75000025	25	125	24	12 1/8	7 3/32	2 3/8	3	16 15/16	1 25/32	4 1/8	137
75000035	35	175	26 3/8	13 31/32	7 7/8	2 3/8	3 11/32	18 5/16	1 31/32	4 5/16	220
75000055	55	275	30 1/2	16 1/8	9 1/16	2 15/16	3 9/16	19 11/16	2 3/8	5 1/8	335
75000085	85	425	40 5/32	19 9/32	12 3/16	4 1/16	4 5/16	27 23/32	3 15/16	7 7/8	776
75000120	120	600	48 13/16	25 19/32	16 7/16	4 1/8	6 5/16	33 25/32	3 15/16	8 21/32	1155
75000150	150	750	51 1/2	27 15/16	18 31/32	4 17/32	7 3/32	36 3/16	3 15/16	9 7/16	1358
75000200	200	1000	58 5/32	31 3/32	21 21/32	5 1/8	7 7/8	40 1/32	4 23/32	11 1/32	1548

Tolerance: Forged parts ± 5%, machined parts ± 1/32 inch

14-06-2018

Material : High tensile steel
Safety factor : 4 times
Finish : Galvanized
Temperature range : -20°C up to +200°C
Standard certification : Certificate of Conformity

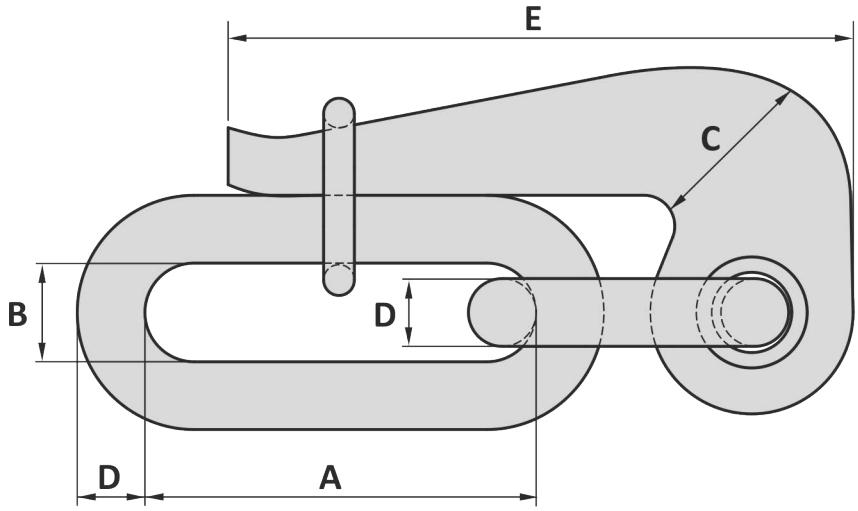

Art. No.	WLL ton	D mm	A mm	B mm	C mm	E mm	Weight kg
44100000	0.4	9	89	16	27	125	0.62
44120000	0.75	12	102	22	28	165	0.95
44160000	1.25	16	130	23	42	180	1.5
44200000	2	22	170	34	46	230	3.5
44250000	5	25	200	38	66	280	7.6
44350000	9	32	260	58	88	360	14

Tolerance: Forged parts ± 5%, machined parts ± 1 mm

Art. No.	WLL ton	D inch	A inch	B inch	C inch	E inch	Weight lbs
44100000	0.4	11/32	3 1/2	5/8	1 1/16	4 15/16	1.4
44120000	0.75	15/32	4	7/8	1 3/32	6 1/2	2.1
44160000	1.25	5/8	5 1/8	29/32	1 21/32	7 3/32	3.3
44200000	2	7/8	6 11/16	1 11/32	1 13/16	9 1/16	7.7
44250000	5	1	7 7/8	1 1/2	2 19/32	11 1/32	17
44350000	9	1 1/4	10 1/4	2 9/32	3 15/32	14 3/16	31

Tolerance: Forged parts ± 5%, machined parts ± 1/32 inch

01-08-2012

ROV SHANK HOOK

TYPE HK5

Material : Alloy steel
Safety factor : 4 times
Finish : Painted
Temperature range : -40°F up to +392°F, Polar Rated
Standard certification : Certificate of Conformity
3.1 material certificate EN 10204

Spare latches available on request

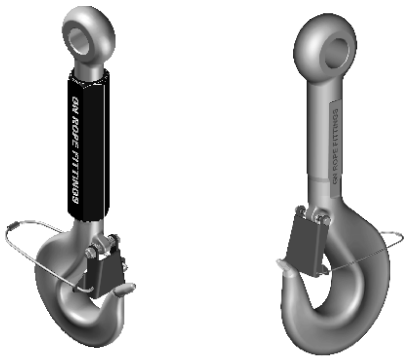

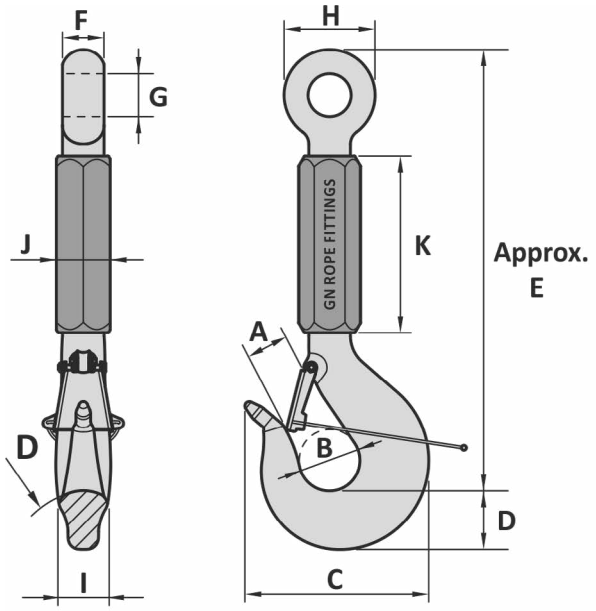

Type for hook WLL 5.4 ton ≤ WLL 80 ton

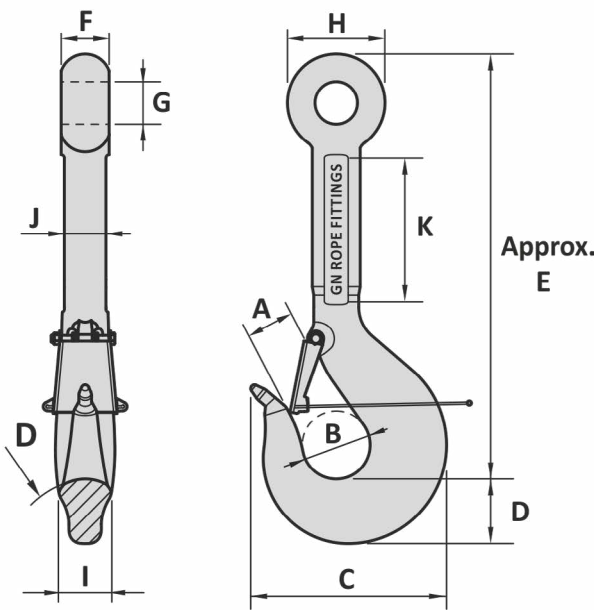

Type for hook WLL 100 ton ≤ WLL 400 ton

Art. No.	WLL ton	MBL ton	A inch	B inch	C inch	D inch	E inch	F inch	G inch	H inch	I inch	J inch	K inch	Weight lbs
53000005	5.4	21.6	1 11/32	1 31/32	6 11/32	1 9/16	20 9/32	1 11/32	1 7/32	2 11/16	1 1/4	1 25/32	9 27/32	12
53000012	12.5	50	1 5/8	2 15/32	7 7/8	2 9/32	22 1/4	1 25/32	1 9/16	3 9/16	1 25/32	2 3/8	10 1/4	26
53000016	16	64	1 15/16	2 3/4	8 13/16	2 5/8	24	1 7/8	1 3/4	4	2 3/32	2 3/8	11 1/32	37
53000025	25	100	2 5/32	3 5/32	9 3/4	2 15/16	25 19/32	2 3/16	2 1/16	4 1/8	2 3/8	2 3/4	10 5/8	49
53000032	32	128	2 5/16	3 9/16	11 11/32	3 11/32	31 1/2	2 9/16	2 3/8	5 1/8	2 5/8	3 5/32	12 3/16	77
53000040	40	160	2 23/32	3 15/16	12 7/16	3 3/4	32 9/32	2 3/4	2 3/4	5 29/32	2 15/16	3 11/32	13	104
53000050	50	200	3	4 13/32	13 1/2	4 3/16	33 15/32	3 5/32	3 1/16	6 3/8	3 11/32	3 15/16	13 25/32	137
53000063	63	252	3 5/16	4 15/16	14 13/16	4 21/32	39 3/8	3 11/32	3 3/8	7 3/32	3 3/4	4 5/16	14 3/16	194
53000080	80	320	3 13/16	5 1/2	16 7/16	5 3/16	37 13/32	3 15/16	3 3/8	8 1/4	4 3/16	4 23/32	11 13/32	245
53000100	100	400	4 5/16	6 5/16	18 3/16	5 29/32	39 3/8	4 5/16	3 15/16	8 31/32	4 21/32	3 7/8	12 19/32	342
53000125	125	500	5 3/16	7 3/32	20 1/32	6 11/16	41 11/32	4 7/8	4 5/16	10 1/4	5 3/16	4 3/16	11 1/32	461
53000160	160	640	5 3/8	7 7/8	23	7 15/32	43 5/16	5 7/16	5 1/8	11 13/16	5 29/32	4 23/32	11 1/32	699
53000200	200	800	6 9/16	8 13/16	25 1/2	8 11/32	47 1/4	6 5/16	5 1/8	13 25/32	6 11/16	5 11/32	11 1/32	809
53000250	250	1000	7 13/32	9 27/32	29 1/8	9 9/32	49 7/32	7 3/32	5 23/32	14 9/16	7 15/32	5 29/32	11 13/16	1360
53000300	300	1200	8 1/16	11 1/32	32 15/32	10 7/16	51 31/32	7 15/32	6 5/16	15 15/16	8 11/32	6 5/16	11 13/16	1609
53000400	400	1600	8 7/8	12 13/32	36 7/32	11 13/16	55 1/8	8 1/4	7 9/32	18 5/16	9 9/32	7 3/32	11 13/16	2205

Tolerance: Forged parts ± 5%, machined parts ± 1/32 inch

18-12-2017

Material : Alloy steel
Safety factor : 4 times
Finish : Painted
Temperature range : -40°C up to +200°C, Polar Rated
Standard certification : Certificate of Conformity
3.1 material certificate EN 10204

Spare latches available on request

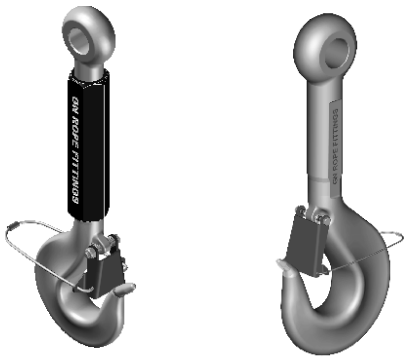

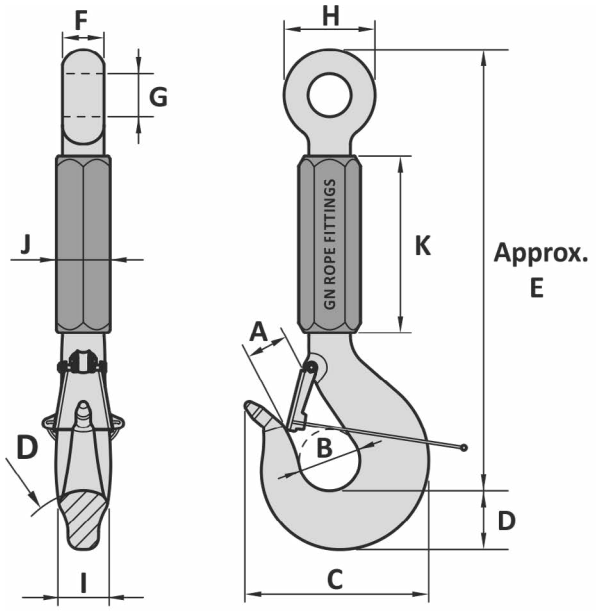

Type for hook WLL 5.4 ton ≤ WLL 80 ton

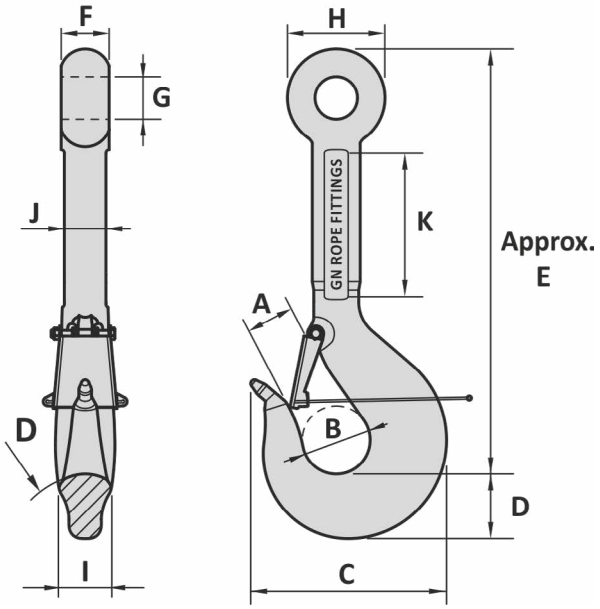

Type for hook WLL 100 ton ≤ WLL 400 ton

Art. No.	WLL ton	MBL ton	A mm	B mm	C mm	D mm	E mm	F mm	G mm	H mm	I mm	J mm	K mm	Weight kg
53000005	5.4	21.6	34	50	161	40	515	34	31	68	32	45	250	5.3
53000012	12.5	50	41	63	200	58	565	45	40	90	45	60	260	12
53000016	16	64	49	70	224	67	610	48	44	102	53	60	280	17
53000025	25	100	55	80	248	75	650	56	52	105	60	70	270	22
53000032	32	128	59	90	288	85	800	65	60	130	67	80	310	35
53000040	40	160	69	100	316	95	820	70	70	150	75	85	330	47
53000050	50	200	76	112	343	106	850	80	78	162	85	100	350	62
53000063	63	252	84	125	376	118	1000	85	86	180	95	110	360	92
53000080	80	320	97	140	418	132	950	100	86	210	106	120	290	111
53000100	100	400	110	160	462	150	1000	110	100	228	118	98	320	155
53000125	125	500	132	180	509	170	1050	124	110	260	132	106	280	209
53000160	160	640	137	200	584	190	1100	138	130	300	150	120	280	317
53000200	200	800	167	224	648	212	1200	160	130	350	170	136	280	367
53000250	250	1000	188	250	740	236	1250	180	145	370	190	150	300	617
53000300	300	1200	205	280	825	265	1320	190	160	405	212	160	300	730
53000400	400	1600	225	315	920	300	1400	210	185	465	236	180	300	1000

Tolerance: Forged parts ± 5%, machined parts ± 1 mm

18-12-2017

ANCHOR LINE HOOK

TYPE HK6

Material : Cast steel
Safety factor : 4 times
Finish : Galvanized
Temperature range : -20°C up to +200°C
Standard certification : Certificate of Conformity

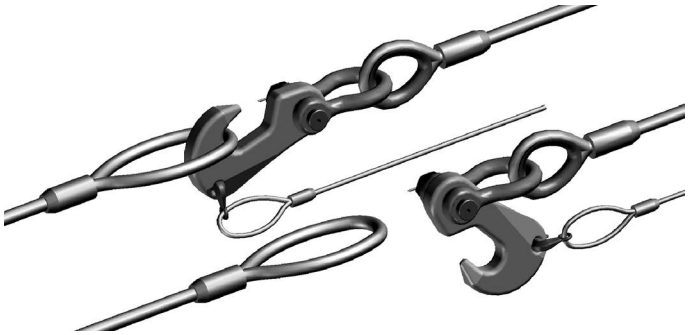

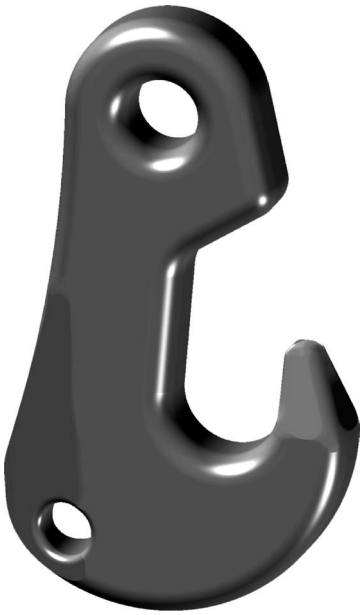

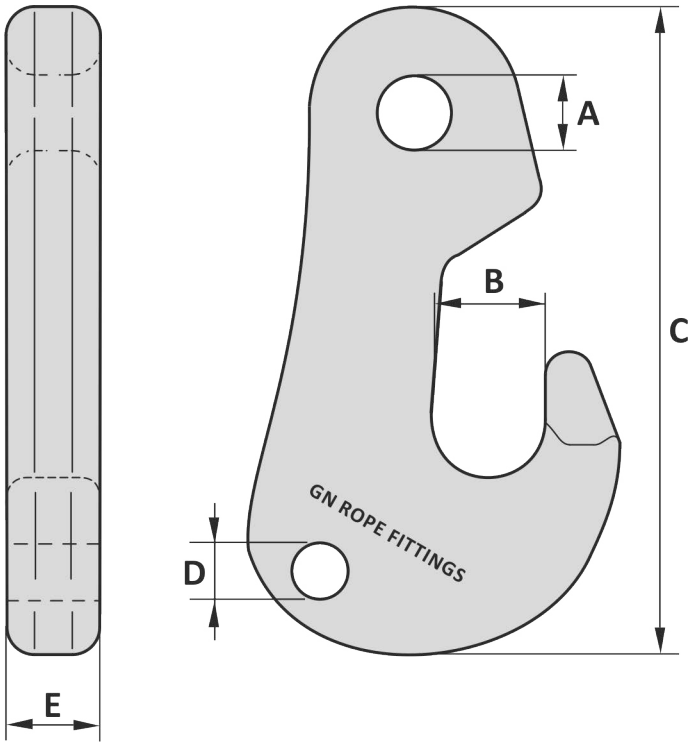

Art. No.	WLL ton	MBL ton	A mm	B mm	C mm	D mm	E mm	Weight kg
74000015	15	60	38	58	343	32	45	11
74000020	20	80	40	74	343	32	60	14
74000025	25	100	52	86	440	38	65	26
74000050	50	200	80	112	618	45	90	67
74000080	80	320	90	130	709	62	110	116

Tolerance: ± 5%

Art. No.	WLL ton	MBL ton	A inch	B inch	C inch	D inch	E inch	Weight lbs
74000015	15	60	1 ½	2 9/32	13 ½	1 ¼	1 25/32	24
74000020	20	80	1 9/16	2 29/32	13 ½	1 ¼	2 ⅜	31
74000025	25	100	2 1/16	3 ⅜	17 5/16	1 ½	2 9/16	57
74000050	50	200	3 5/32	4 13/32	24 5/16	1 25/32	3 9/16	148
74000080	80	320	3 9/16	5 ⅛	27 29/32	2 7/16	4 5/16	256

Tolerance: ± 5%

01-07-2011

Material : Alloy steel, Grade R3/R3S/R4/R4S
Finish : Painted, special specifications on request
Temperature range : -40°C up to +200°C, Polar Rated
Standard certification : Certificate of Conformity
3.1 material certificated EN 10204

Non-standard sizes or custom products available on request

TYPE APPROVED PRODUCT DNV·GL OS E302

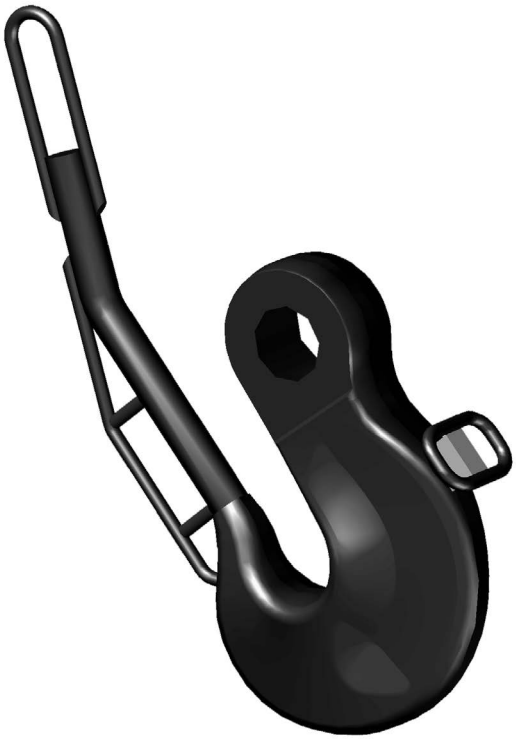

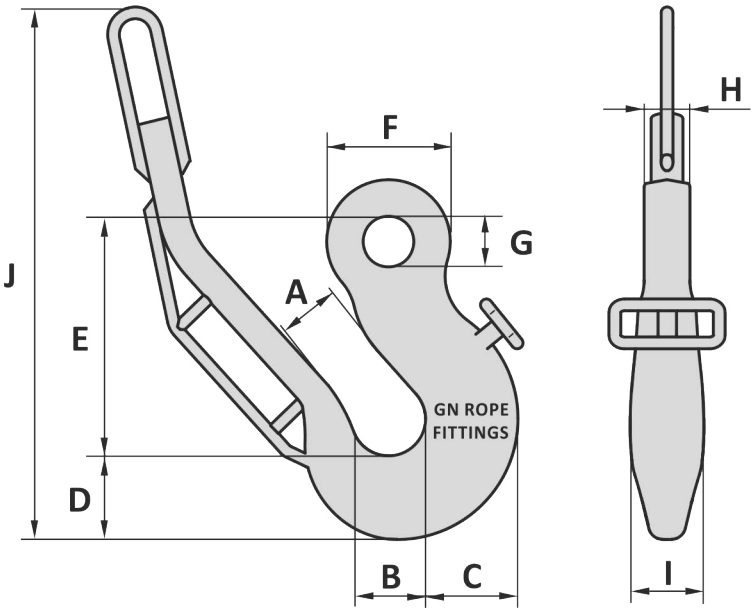

Art. No.	Hook No.	PL kN	MBL kN	A mm	B mm	C mm	D mm	E mm	F mm	G mm	H mm	I mm	J mm	Weight kg
53100040	40	7096	9001	162	200	250	225	645	334	135	131	200	1539	394
53100050	50	10700	13573	180	200	272	256	665	345	170	163	245	1443	481

Tolerance: ± 5%

Art. No.	Hook No.	PL kN	MBL kN	A inch	B inch	C inch	D inch	E inch	F inch	G inch	H inch	I inch	J inch	Weight lbs
53100040	40	7096	9001	6 3/8	7 7/8	9 27/32	8 7/8	25 3/8	13 5/32	5 5/16	5 5/32	7 7/8	60 19/32	869
53100050	50	10700	13573	7 3/32	7 7/8	10 23/32	10 1/16	26 3/16	13 19/32	6 11/16	6 13/32	9 21/32	56 13/16	1060

Tolerance: ± 5%

01-07-2014

SOFTSLING FRIENDLY ROV HOOK

TYPE HK14

Material	:	Alloy steel
Safety factor	:	4 times
Finish	:	Painted
Temperature range	:	-40°F up to +392°F, Polar Rated
Standard certification	:	Certificate of Conformity 3.1 material certificated EN 10204

Non-standard sizes or custom products available on request

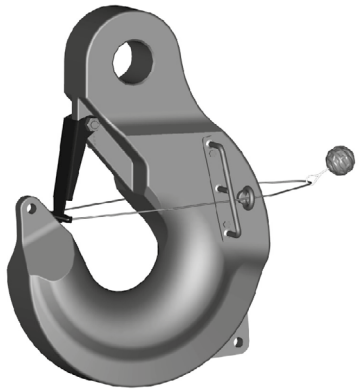

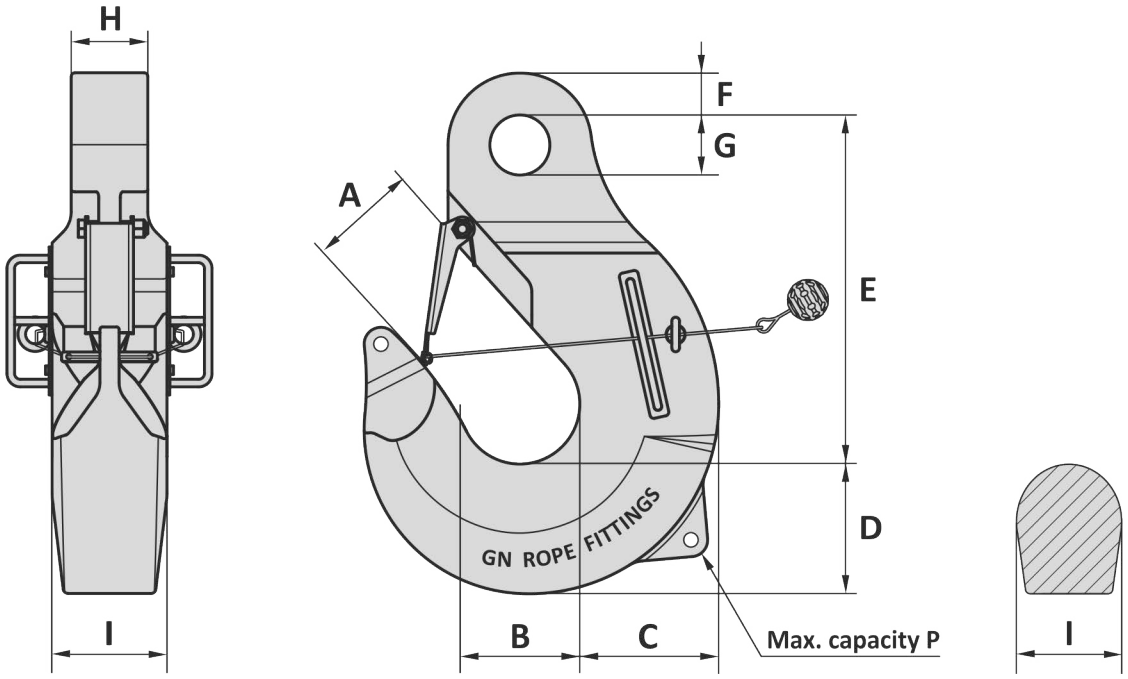

Art. No.	WLL ton	MBL ton	A inch	B inch	C inch	D inch	E inch	F inch	G inch	H inch	I inch	P ton	Weight lbs
73000050	50	200	4 1/16	4 23/32	5 1/2	4 15/16	15 7/16	1 15/16	2 7/8	2 3/8	3 9/16	2	146
73000063	63	252	4 9/32	5 1/8	6 5/16	5 1/2	16 21/32	2 3/32	3 11/32	2 3/4	3 15/16	3.25	198
73000080	80	320	4 11/16	5 1/2	7 3/32	6 5/16	18 5/16	2 3/8	3 9/16	3 5/32	4 23/32	4.75	293
73000100	100	400	5 19/32	6 5/16	7 15/32	6 1/2	20 7/8	2 9/16	4 5/16	3 15/16	5 1/2	4.75	412
73000150	150	600	6 3/16	7 3/32	9 1/16	7 7/8	23 7/32	2 3/4	4 23/32	4 23/32	7 3/32	6.5	692
73000200	200	800	7 3/32	8 1/4	10 1/4	9 1/16	26 11/16	3 1/16	5 5/16	5 23/32	7 7/8	8.5	1030
73000250	250	1000	8 19/32	9 27/32	11 13/32	10 1/4	29 17/32	3 9/16	5 29/32	6 11/16	9 1/16	9.5	1446
73000300	300	1200	10 3/16	11 13/16	12 19/32	11 13/32	34 1/16	3 15/16	6 5/16	7 3/32	10 1/4	12	2017
73000400	400	1600	11 1/32	12 19/32	13 25/32	12 19/32	35 13/16	4 1/8	7 3/32	7 7/8	11 13/16	17	2685
73000500	500	2000	11 9/16	13 3/8	15 11/32	13 3/8	38 25/32	4 5/16	7 15/32	8 21/32	12 19/32	17	3397
73000600	600	2400	11 31/32	13 25/32	16 17/32	14 9/16	40 3/4	4 23/32	8 1/4	9 27/32	13 3/8	25	4151
73000700	700	2800	12 15/32	14 3/16	17 23/32	15 11/32	41 3/4	4 15/16	8 21/32	11 1/32	14 31/32	25	5049
73000800	800	3200	12 7/8	14 31/32	19 11/16	17 5/16	46 7/16	5 1/2	9 7/16	11 13/16	15 3/4	25	6601
73000900	900	3600	13 5/16	15 3/4	20 15/32	18 1/8	49 5/8	5 29/32	10 1/4	12 19/32	16 17/32	35	7859
73001000	1000	4000	13 29/32	16 17/32	22 1/16	18 29/32	52 3/4	6 5/16	11 1/32	13 3/8	17 5/16	35	9370
73001250	1250	5000	14 5/8	17 23/32	23 5/8	20 7/8	55 23/32	7 9/32	12 3/16	14 3/16	18 29/32	42.5	12125
73001550	1550	6200	15 1/2	18 29/32	26	23 7/32	59 1/4	8 1/16	13	14 3/16	21 1/4	42.5	15432

Tolerance: Machined parts ± 1/32 inch

10-07-2017

SOFTSLING FRIENDLY ROV HOOK

TYPE HK14

Material : Alloy steel
Safety factor : 4 times
Finish : Painted
Temperature range : -40°C up to +200°C, Polar Rated
Standard certification : Certificate of Conformity
3.1 material certificated EN 10204

Non-standard sizes or custom products available on request

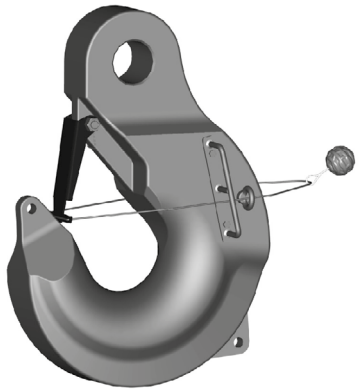

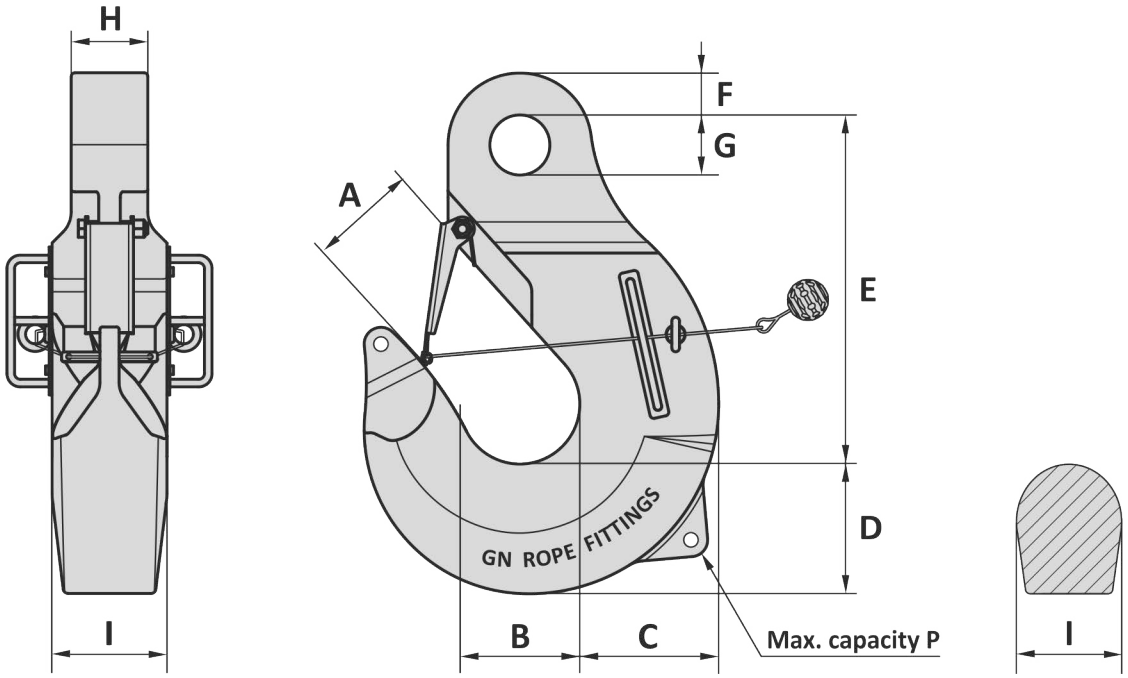

Art. No.	WLL ton	MBL ton	A mm	B mm	C mm	D mm	E mm	F mm	G mm	H mm	I mm	P ton	Weight kg
73000050	50	200	103	120	140	125	392	49	73	60	90	2	66
73000063	63	252	109	130	160	140	423	53	85	70	100	3.25	90
73000080	80	320	119	140	180	160	465	60	90	80	120	4.75	133
73000100	100	400	142	160	190	165	530	65	110	100	140	4.75	187
73000150	150	600	157	180	230	200	590	70	120	120	180	6.5	314
73000200	200	800	180	210	260	230	678	78	135	145	200	8.5	467
73000250	250	1000	218	250	290	260	750	90	150	170	230	9.5	656
73000300	300	1200	259	300	320	290	865	100	160	180	260	12	915
73000400	400	1600	280	320	350	320	910	105	180	200	300	17	1218
73000500	500	2000	294	340	390	340	985	110	190	220	320	17	1541
73000600	600	2400	304	350	420	370	1035	120	210	250	340	25	1883
73000700	700	2800	317	360	450	390	1060	125	220	280	380	25	2290
73000800	800	3200	327	380	500	440	1180	140	240	300	400	25	2994
73000900	900	3600	338	400	520	460	1260	150	260	320	420	35	3565
73001000	1000	4000	353	420	560	480	1340	160	280	340	440	35	4250
73001250	1250	5000	371	450	600	530	1415	185	310	360	480	42.5	5500
73001550	1550	6200	394	480	660	590	1505	205	330	360	540	42.5	7000

Tolerance: Machined parts ± 1 mm

10-07-2017

SOFTSLING FRIENDLY ROV TRANSFER HOOK TYPE HK15

Material : Alloy steel
Safety factor : 4 times
Finish : Painted
Temperature range : -40°C up to +200°C, Polar Rated
Standard certification : Certificate of Conformity
3.1 material certificated EN 10204

Non-standard sizes or custom products available on request

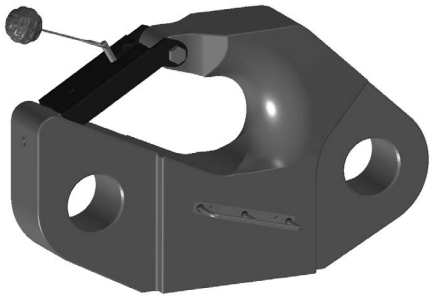

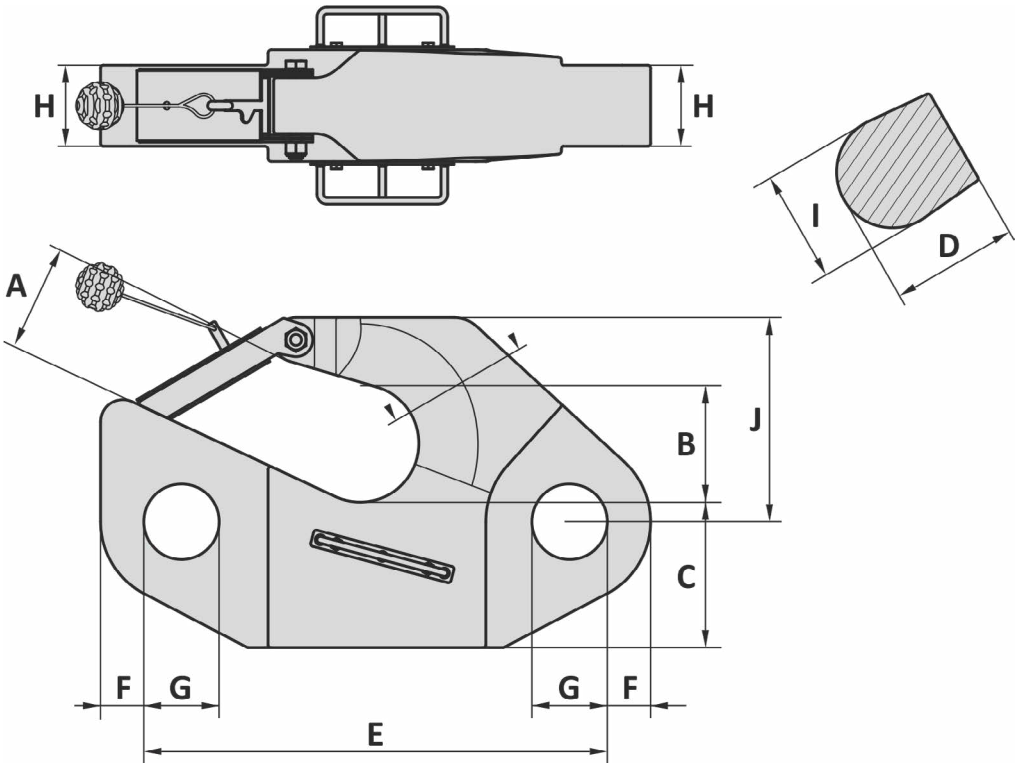

Art. No.	WLL ton	MBL ton	A mm	B mm	C mm	D mm	E mm	F mm	G mm	H mm	I mm	J mm	Weight kg
77000100	100	400	147	160	190	160	630	65	110	100	140	280	185
77000150	150	600	165	180	230	200	720	70	120	120	180	335	299
77000200	200	800	185	210	260	220	830	78	135	145	200	365	467
77000250	250	1000	219	250	290	240	920	90	150	170	230	425	683
77000300	300	1200	266	300	320	270	1055	100	160	180	260	475	955
77000400	400	1600	285	320	350	300	1125	105	180	200	300	505	1231
77000500	500	2000	302	340	390	320	1215	110	190	220	320	550	1573
77000600	600	2400	313	350	420	350	1285	120	210	250	340	580	1936
77000700	700	2800	323	360	450	370	1325	125	220	280	380	600	2334
77000800	800	3200	337	380	500	400	1480	140	240	300	400	665	3120

Tolerance: Machined parts ± 1 mm

Art. No.	WLL ton	MBL ton	A inch	B inch	C inch	D inch	E inch	F inch	G inch	H inch	I inch	J inch	Weight lbs
77000100	100	400	5 25/32	6 5/16	7 15/32	6 11/16	24 13/16	2 9/16	4 5/16	3 15/16	5 1/2	11 1/32	408
77000150	150	600	6 1/2	7 3/32	9 1/16	7 7/8	28 11/32	2 3/4	4 23/32	4 23/32	7 3/32	13 3/16	659
77000200	200	800	7 9/32	8 1/4	10 1/4	9 1/16	32 11/16	3 1/16	5 5/16	5 23/32	7 7/8	14 3/8	1030
77000250	250	1000	8 5/8	9 27/32	11 13/32	9 7/16	36 7/32	3 9/16	5 29/32	6 11/16	9 1/16	16 3/4	1506
77000300	300	1200	10 15/32	11 13/16	12 19/32	11 1/32	41 17/32	3 15/16	6 5/16	7 3/32	10 1/4	18 11/16	2105
77000400	400	1600	11 7/32	12 19/32	13 25/32	11 13/16	44 9/32	4 1/8	7 3/32	7 7/8	11 13/16	19 7/8	2714
77000500	500	2000	11 7/8	13 3/8	15 11/32	13	47 27/32	4 5/16	7 15/32	8 21/32	12 19/32	21 21/32	3468
77000600	600	2400	12 5/16	13 25/32	16 17/32	14 3/16	50 19/32	4 23/32	8 1/4	9 27/32	13 3/8	22 27/32	4268
77000700	700	2800	12 23/32	14 3/16	17 23/32	14 9/16	52 5/32	4 15/16	8 21/32	11 1/32	14 31/32	23 5/8	5146
77000800	800	3200	13 1/4	14 31/32	19 11/16	16 17/32	58 1/4	5 1/2	9 7/16	11 13/16	15 3/4	26 3/16	6878

Tolerance: Machined parts ± 1/32 inch

14-06-2016

SOFTSLING FRIENDLY ROV CLEVIS HOOK TYPE HK17

Material	:	Alloy steel
Safety factor	:	4 times
Finish	:	Painted
Temperature range	:	-40°C up to +200°C, Polar Rated
Standard certification	:	Certificate of Conformity 3.1 material certificated EN 10204

Non-standard sizes or custom products available on request

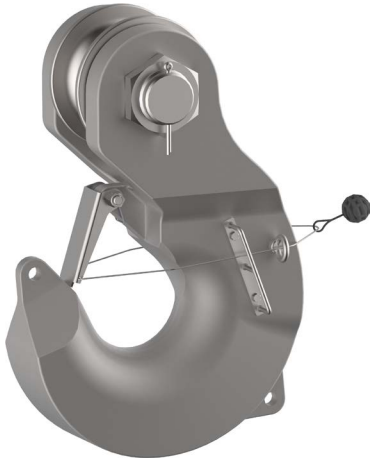

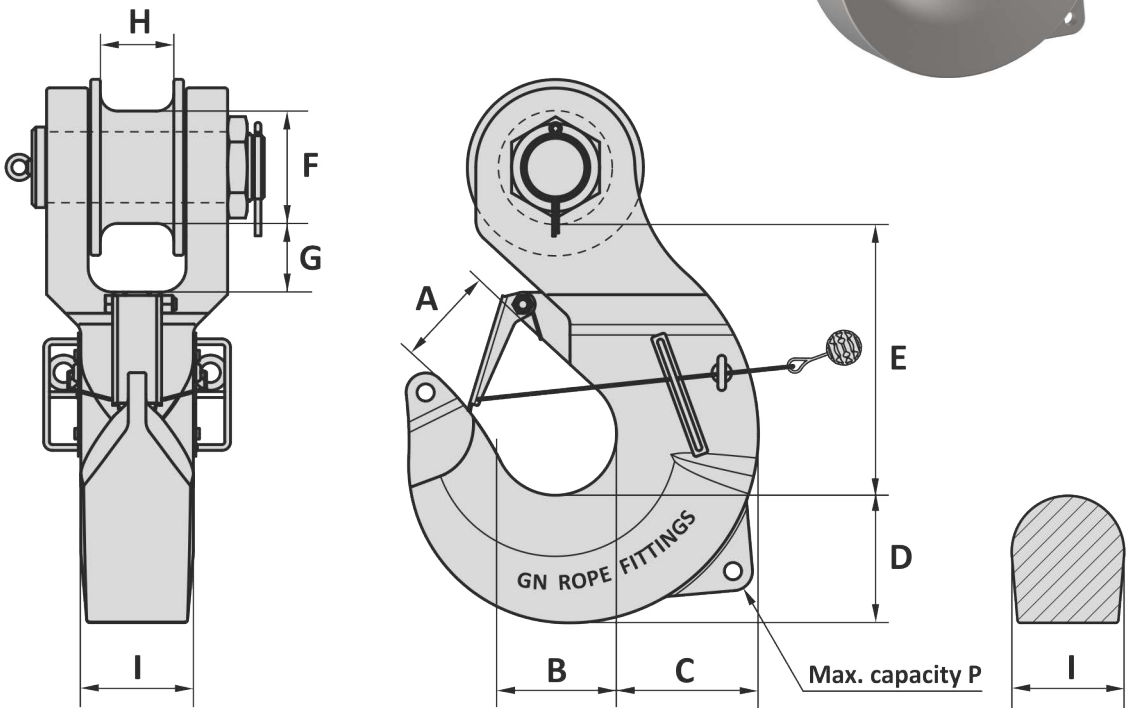

Art. No.	WLL ton	MBL ton	A mm	B mm	C mm	D mm	E mm	F mm	G mm	H mm	I mm	P ton	Weight kg
76000080	80	320	120	140	180	160	350	120	80	85	120	4.75	151
76000100	100	400	135	160	190	165	390	140	90	100	140	4.75	214
76000150	150	600	147	180	230	200	430	180	100	110	180	6.5	361
76000200	200	800	174	210	260	230	495	200	125	135	200	8.5	536
76000250	250	1000	202	250	290	260	555	230	140	150	230	9.5	787
76000300	300	1200	235	300	320	280	630	260	155	170	260	12	1065
76000400	400	1600	249	320	350	310	700	300	180	200	300	17	1471
76000500	500	2000	269	340	390	340	750	320	190	215	320	17	1841
76000600	600	2400	279	350	420	370	785	340	200	230	340	25	2289

Tolerance: Machined parts ± 1 mm

Art. No.	WLL ton	MBL ton	A inch	B inch	C inch	D inch	E inch	F inch	G inch	H inch	I inch	P ton	Weight lbs
76000080	80	320	4 23/32	5 1/2	7 3/32	6 5/16	13 25/32	4 23/32	3 5/32	85	4 23/32	4.75	333
76000100	100	400	5 5/16	6 5/16	7 15/32	6 1/2	15 11/32	5 1/2	3 9/16	100	5 1/2	4.75	472
76000150	150	600	5 25/32	7 3/32	9 1/16	7 7/8	16 15/16	7 3/32	3 15/16	110	7 3/32	6.5	796
76000200	200	800	6 27/32	8 1/4	10 1/4	9 1/16	19 1/2	7 7/8	4 15/16	135	7 7/8	8.5	1182
76000250	250	1000	7 15/16	9 27/32	11 13/32	10 1/4	21 27/32	9 1/16	5 1/2	150	9 1/16	9.5	1735
76000300	300	1200	9 1/4	11 13/16	12 19/32	11 1/32	24 13/16	10 1/4	6 3/32	170	10 1/4	12	2348
76000400	400	1600	9 13/16	12 19/32	13 25/32	12 3/16	27 9/16	11 13/16	7 3/32	200	11 13/16	17	3243
76000500	500	2000	10 19/32	13 3/8	15 11/32	13 3/8	29 17/32	12 19/32	7 15/32	215	12 19/32	17	4059
76000600	600	2400	11	13 25/32	16 17/32	14 9/16	30 29/32	13 3/8	7 7/8	230	13 3/8	25	5046

Tolerance: Machined parts ± 1/32 inch

01-04-2017

NOTES

D15
Dee safety pin shackle

D14
End joining shackle with round pin

D16
Joining shackle with pear shape pin

D17
Anchor shackle with oval pin

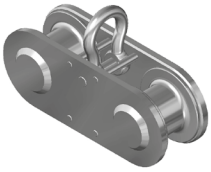

H15
Plate connector / Thimble shackle

D18
D-shackle with roulette thimble

K17
Forged roulette thimble

S05
PMS / LTM forged socket

SC3
CR connector

SC4
Pear connecting link

SC7
Chain adapter with special end link

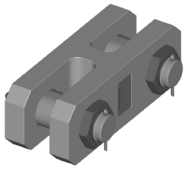

SC8
Forged H-link

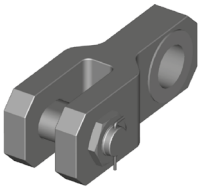

SC9
Forged Y-link

SC10
Installation link

SW5
CR-D rope swivel

SW6
CR-X mooring swivel

HK12
KS hook

TR2
Mooring triangle & quad plate

Application information

GN mooring type connectors are used in mobile, temporary and long term mooring lines. All types such as Shackles, H-links, Forged H-links, Plate connectors and PMS/LTM sockets are designed and made in our production facility located in the Netherlands.
GN is a DNV-GL, ABS, Lloyd's and BV approved manufacturer for mooring chain accessories. Our inhouse engineering department is able to design the right connector, FEA strength, Fatigue calculation, Classification design approvals, and a complete product certificate for use of this products in the mooring lines.

Shackles are mainly used on chain end links and can be made in all sizes to give the best fit connection.
Forged H-links can be special designed to fit common links and other connection points.
Plate connectors are mainly designed to connect chain to rope or rope to rope.
LTM Sockets are Forged and used on steel wire rope. Different type such as open and closed sockets can be made in any size and configuration.

For special designs which are not in accordance with ISO1704, Classification design approval must be considered for full certification!

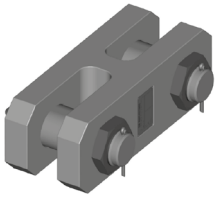
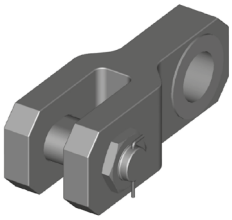

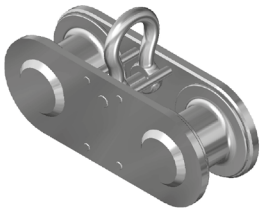

Testing and inspection

All mooring connectors must be proof load tested, 1 of every 25 pieces or heat treatment batch must be break load tested. All mooring connectors must be 100% MPI and US inspected. Mechanical testing every heat treatment batch or 1 of every 25 pieces. Mechanical testing must be performed on a real size product, test specimens are not allowed by the classification bureaus. DNV and BV allows to do the mechanical test out of a break loaded shackle, however ABS require to do this from a proof loaded shackle.

Standard impact test is carried out at -20 degrees Celsius. On request we can inform you about low temperature impact values, such as -40, -50 and -60 degrees Celsius.

Grade	Yield stress	Tensile strength	Elongation	Reduction of area	Charpy V-notch		
	Re	Rm	A5	Z	Temperature	Average energy	Single energy
	N/mm2	N/mm2	%	%	°C	Joule	Joule
R3	410	690	17	50	0	60	45
					-20	40	30
R3S	490	770	15	50	0	65	49
					-20	45	34
R4	580	860	12	50	-20	50	38
R4S	700	960	12	50	-20	56	42
R5	760	1000	12	50	-20	58	44

Part of mooring line	Corrosion allowance reffered to the chain diameter Regular inspection (mm/year)	Requirements for the Norwegian continental shelf (mm/year)
Splash zone	0.4	0.8
Catenary	0.3	0.2
Bottom	0.4	0.2

Loads

Proof load and Break loads for the mooring chain accessories are minimum the same as the used chain and grade. According the Mooring chain guides the Proof load and Break load of studded chain must be used, even as it is used for stud-less chain. Fatigue loads can be calculated by FEA in accordance with the required classification bureau or API-RP-2SK. Life time is to be advised by the customer. Standard Life time safety factor is 10 times, or otherwise requested by customer. All our designs are calculated with corrosion allowance taken into account. Standard corrosion allowance used are in accordance with DNV specification DNV-OS-E301.

	Grade R3 (kN)	Grade R3S (kN)	Grade R4 (kN)	Grade R4S (kN)	Grade R5 (kN)
Proof load, studless link	$0.0156d^2$ (44-0.08d)	$0.0174d^2$ (44-0.08d)	$0.0192d^2$ (44-0.08d)	$0.0213d^2$ (44-0.08d)	$0.0223d^2$ (44-0.08d)
Proof load, stud link	$0.0156d^2$ (44-0.08d)	$0.0180d^2$ (44-0.08d)	$0.0216d^2$ (44-0.08d)	$0.0240d^2$ (44-0.08d)	$0.0251d^2$ (44-0.08d)
Break load	$0.0223d^2$ (44-0.08d)	$0.0249d^2$ (44-0.08d)	$0.0274d^2$ (44-0.08d)	$0.0304d^2$ (44-0.08d)	$0.0320d^2$ (44-0.08d)

d is the chain nominal diameter
Table as per DNV-GL OS-E302

Dimensions and tolerances

Standard dimensions are given in our data sheets in this chapter. Special dimensions on request.
In accordance the mooring chain guides standard tolerances are descript as follows:
The diameter must have no negative tolerance. Unless otherwise specified, the plus tolerance on diameter shall not exceed 5% and tolerances on other dimensions shall not exceed plus or minus 2.5%.

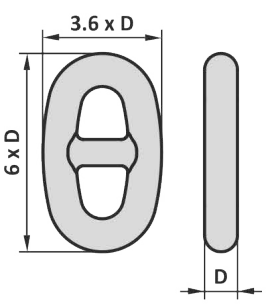

Stud Common Link

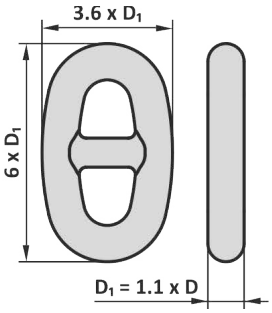

Stud Enlarged Link

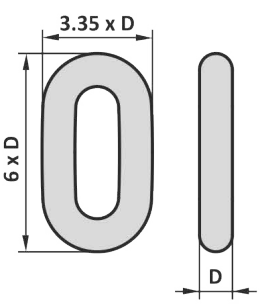

Studless Common Link

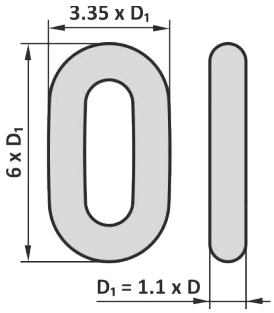

Studless Enlarged Link

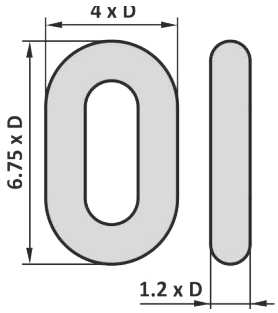

End Link

Testloads

	Proof load studless link					Proof load stud link					Break load				
Grade	R3	R3S	R4	R4S	R5	R3	R3S	R4	R4S	R5	R3	R3S	R4	R4S	R5
C-factor	0.0156	0.0174	0.0192	0.0213	0.0223	0.0156	0.018	0.0216	0.024	0.0251	0.0223	0.0249	0.0274	0.0304	0.032
mm	kN	kN	kN	kN	kN	kN	kN	kN	kN	kN	kN	kN	kN	kN	kN
68	2782	3102	3423	3798	3976	2782	3209	3851	4279	4475	3976	4440	4885	5420	5706
70	2935	3274	3613	4008	4196	2935	3387	4064	4516	4723	4196	4685	5156	5720	6021
73	3172	3538	3904	4331	4535	3172	3660	4392	4881	5104	4535	5064	5572	6182	6507
76	3417	3811	4205	4665	4884	3417	3942	4731	5257	5498	4884	5454	6001	6658	7009
78	3584	3997	4411	4893	5123	3584	4135	4962	5514	5766	5123	5720	6295	6984	7351
81	3840	4283	4726	5243	5490	3840	4431	5317	5908	6179	5490	6130	6745	7484	7877
84	4104	4577	5051	5603	5866	4104	4735	5682	6313	6602	5866	6550	7208	7997	8418
87	4374	4878	5383	5972	6252	4374	5046	6056	6729	7037	6252	6981	7682	8523	8971
90	4650	5187	5723	6349	6647	4650	5365	6439	7154	7482	6647	7422	8167	9062	9539
92	4838	5396	5954	6606	6916	4838	5582	6699	7443	7784	6916	7722	8497	9428	9924
95	5125	5716	6307	6997	7326	5125	5913	7096	7884	8246	7326	8180	9001	9987	10512
97	5319	5933	6547	7263	7604	5319	6138	7365	8184	8559	7604	8490	9343	10366	10911
100	5616	6264	6912	7668	8028	5616	6480	7776	8640	9036	8028	8964	9864	10944	11520
102	5817	6488	7159	7942	8315	5817	6712	8054	8949	9359	8315	9285	10217	11336	11932
105	6123	6829	7536	8360	8753	6123	7065	8478	9420	9851	8753	9773	10754	11932	12560
107	6330	7060	7790	8643	9048	6330	7304	8764	9738	10184	9048	10103	11118	12335	12984
111	6750	7529	8308	9217	9650	6750	7789	9347	10385	10861	9650	10775	11856	13154	13847
114	7071	7887	8703	9655	10109	7071	8159	9791	10879	11378	10109	11287	12420	13780	14506
117	7397	8251	9104	10100	10574	7397	8535	10242	11380	11902	10574	11807	12993	14415	15174
120	7728	8619	9511	10551	11047	7728	8916	10700	11889	12434	11047	12334	13573	15059	15852
122	7950	8868	9785	10855	11365	7950	9173	11008	12231	12792	11365	12690	13964	15493	16308
124	8175	9118	10061	11161	11686	8175	9432	11319	12576	13153	11686	13048	14358	15930	16768
127	8515	9497	10479	11626	12171	8515	9824	11789	13099	13700	12171	13591	14955	16592	17466
130	8858	9880	10903	12095	12663	8858	10221	12265	13628	14253	12663	14139	15559	17262	18171
132	9089	10138	11187	12411	12993	9089	10488	12585	13984	14625	12993	14508	15965	17713	18645
137	9674	10790	11906	13209	13829	9674	11162	13395	14883	15565	13829	15441	16992	18852	19844
142	10267	11452	12637	14019	14677	10267	11847	14216	15796	16520	14677	16388	18033	20008	21061
147	10868	12122	13376	14839	15536	10868	12540	15048	16720	17487	15536	17347	19089	21179	22294
152	11476	12800	14124	15669	16405	11476	13241	15890	17655	18464	16405	18317	20156	22363	23540
157	12089	13484	14879	16507	17282	12089	13949	16739	18599	19452	17282	19297	21234	23559	24799
162	12708	14174	15641	17351	18166	12708	14663	17596	19551	20447	18166	20284	22320	24764	26068
165	13081	14590	16100	17861	18699	13081	15094	18112	20125	21047	18699	20879	22976	25491	26833
168	13455	15008	16560	18372	19234	13455	15525	18631	20701	21649	19234	21477	23633	26221	27601
171	13831	15427	17022	18884	19771	13831	15959	19150	21278	22253	19771	22076	24292	26952	28371
175	14333	15986	17640	19569	20488	14333	16538	19845	22050	23061	20488	22877	25174	27930	29400
178	14709	16407	18104	20084	21027	14709	16972	20367	22630	23667	21027	23479	25836	28665	30173
180	14961	16687	18414	20428	21387	14961	17263	20715	23017	24072	21387	23880	26278	29155	30689
185	15590	17389	19188	21287	22286	15590	17989	21586	23985	25084	22286	24884	27383	30381	31980
188	15968	17810	19652	21802	22825	15968	18424	22109	24565	25691	22825	25487	28046	31116	32754
191	16345	18231	20116	22317	23364	16345	18859	22631	25146	26298	23364	26089	28708	31851	33527
194	16721	18651	20580	22831	23903	16721	19294	23152	25725	26904	23903	26690	29369	32585	34300
197	17097	19070	21043	23344	24440	17097	19727	23673	26303	27509	24440	27290	30029	33317	35071
200	17472	19488	21504	23856	24976	17472	20160	24192	26880	28112	24976	27888	30688	34048	35840
205	18094	20182	22270	24706	25866	18094	20878	25054	27837	29113	25866	28881	31781	35261	37116

Markings

As minimum the following markings must be hard stamped in the shackle:
Production number
- Classification certificate number
- Proof load
- Date: month and year
- Production number
- Heat treatment number

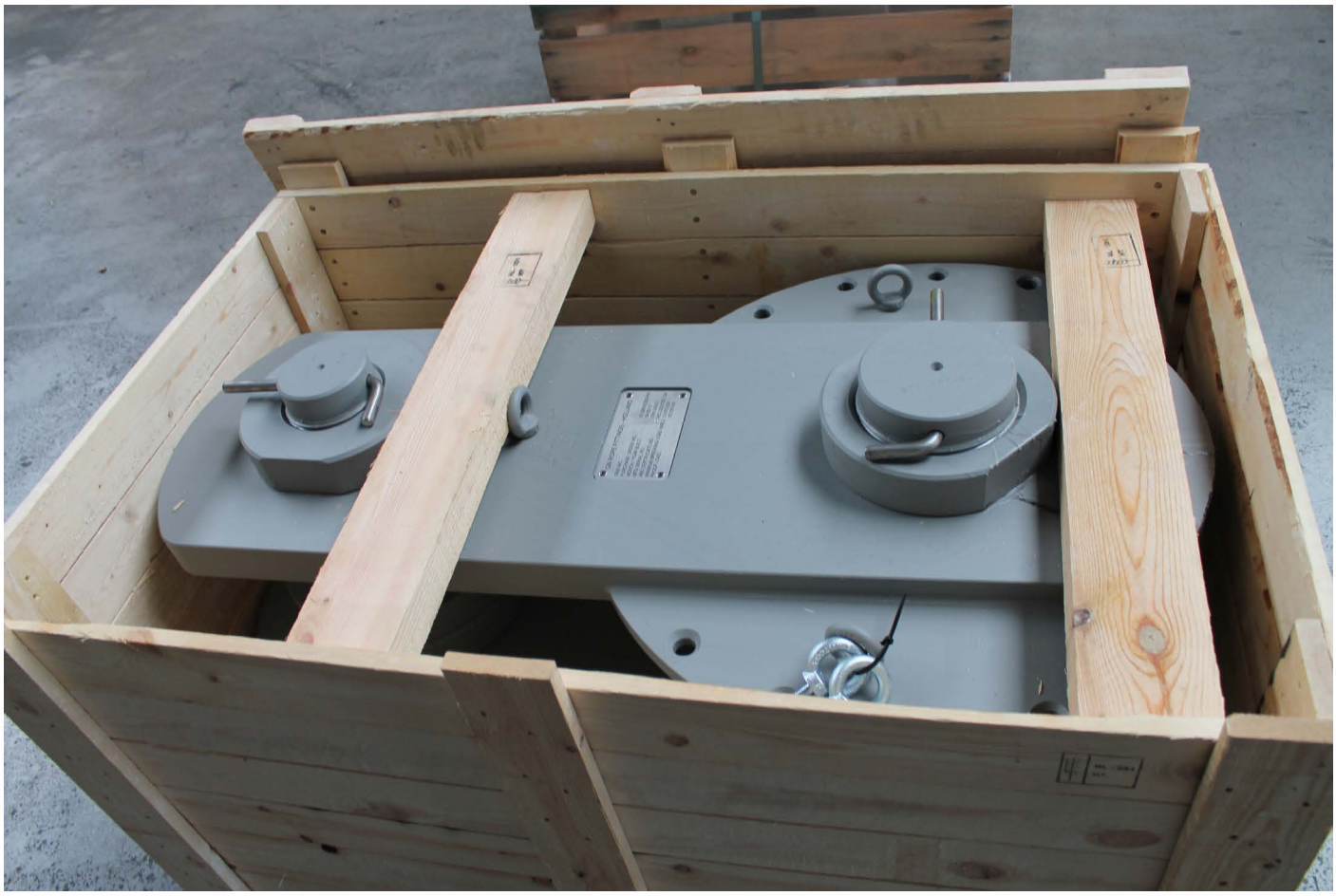

DEE SAFETY PIN SHACKLE

TYPE D15

Material	:	Alloy steel
Safety factor	:	5 times
Finish	:	Painted
Temperature range	:	-40°C up to +200°C, Polar Rated
Standard certification	:	Certificate of Conformity 3.1 material certificate EN 10204

Non-standard sizes or custom products available on request

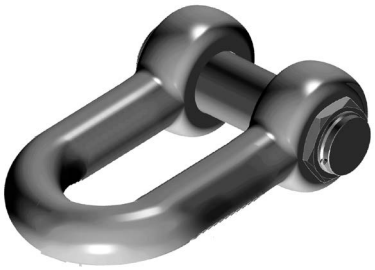

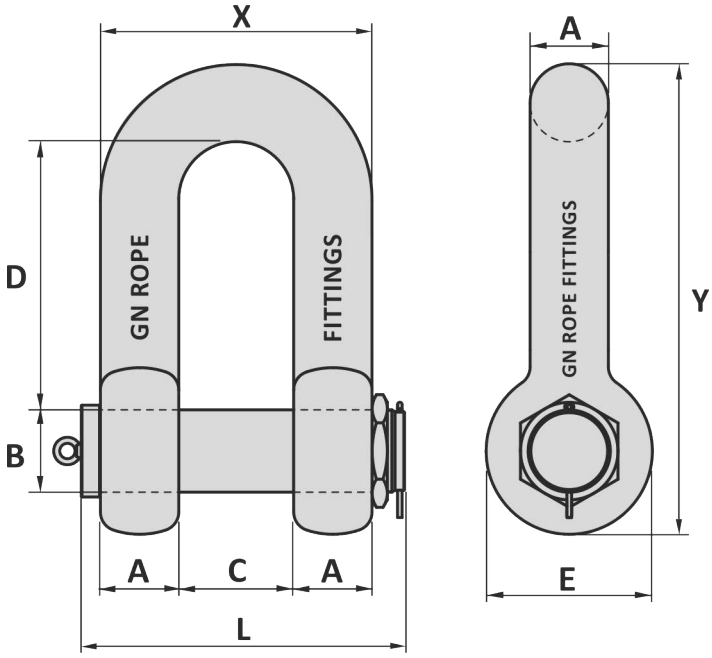

Art. No.	WLL ton	A mm	B mm	C mm	D mm	E mm	L mm	X mm	Y mm	Weight kg
32001209	120	89	95	150	270	200	420	328	504	100
32001508	150	102	108	170	315	230	475	374	586	143
32100115	175	100	110	150	360	220	450	350	625	135
32002009	200	120	125	180	500	260	520	420	813	239
32130140	250	130	140	195	460	280	565	455	795	268
32140152	300	140	150	205	500	300	595	485	855	332
32150164	350	150	160	220	520	320	630	520	910	403
32160170	400	160	170	235	580	340	665	555	965	484
32170180	450	170	180	250	600	360	700	590	1025	576
32180192	500	180	190	265	620	380	735	625	1080	678
32190205	550	190	215	285	665	405	795	665	1165	840

Tolerance: Inside length ± 7.5%, all other forged parts ± 5%, machined parts ± 1 mm

Art. No.	WLL ton	A inch	B inch	C inch	D inch	E inch	L inch	X inch	Y inch	Weight lbs
32001209	120	3 1/2	3 3/4	5 29/32	10 5/8	7 7/8	16 17/32	12 29/32	19 27/32	220
32001508	150	4	4 1/4	6 11/16	12 13/32	9 1/16	18 11/16	14 23/32	23 1/16	315
32100115	175	3 15/16	4 5/16	5 29/32	14 3/16	8 21/32	17 23/32	13 25/32	24 5/8	298
32002009	200	4 23/32	4 15/16	7 3/32	19 11/16	10 1/4	20 15/32	16 17/32	32	527
32130140	250	5 1/8	5 1/2	7 11/16	18 1/8	11 1/32	22 1/4	17 29/32	31 5/16	591
32140152	300	5 1/2	5 29/32	8 1/16	19 11/16	11 13/16	23 7/16	19 3/32	33 21/32	732
32150164	350	5 29/32	6 5/16	8 21/32	20 15/32	12 19/32	24 13/16	20 15/32	35 13/16	888
32160170	400	6 5/16	6 11/16	9 1/4	22 27/32	13 3/8	26 3/16	21 27/32	38	1067
32170180	450	6 11/16	7 3/32	9 27/32	23 5/8	14 3/16	27 9/16	23 7/32	40 11/32	1270
32180192	500	7 3/32	7 15/32	10 7/16	24 13/32	14 31/32	28 15/16	24 5/8	42 1/2	1495
32190205	550	7 15/32	8 15/32	11 7/32	26 3/16	15 15/16	32 5/16	26 3/16	45 7/8	1852

Tolerance: Inside length ± 7.5%, all other forged parts ± 5%, machined parts ± 1/32 inch

27-01-2015

END JOINING SHACKLE WITH ROUND PIN TYPE D14

Material	:	Alloy steel, Grade R3/R3S/R4/R4S/R5
Finish	:	Painted
Standards	:	ABNT NBR 13715
Temperature range	:	-40°C up to +200°C, Polar Rated
Standard certification	:	Certificate of Conformity 3.1 material certificate EN 10204

Also to be used for mooring applications
Non-standard sizes or custom products available on request

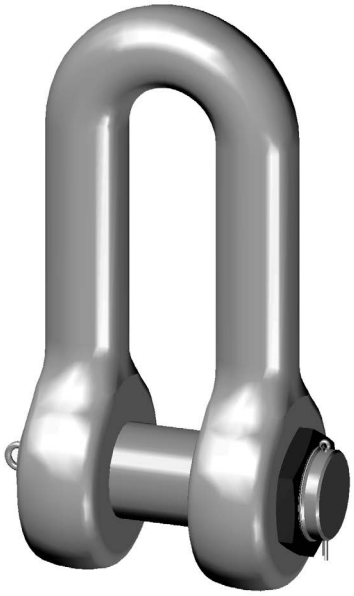

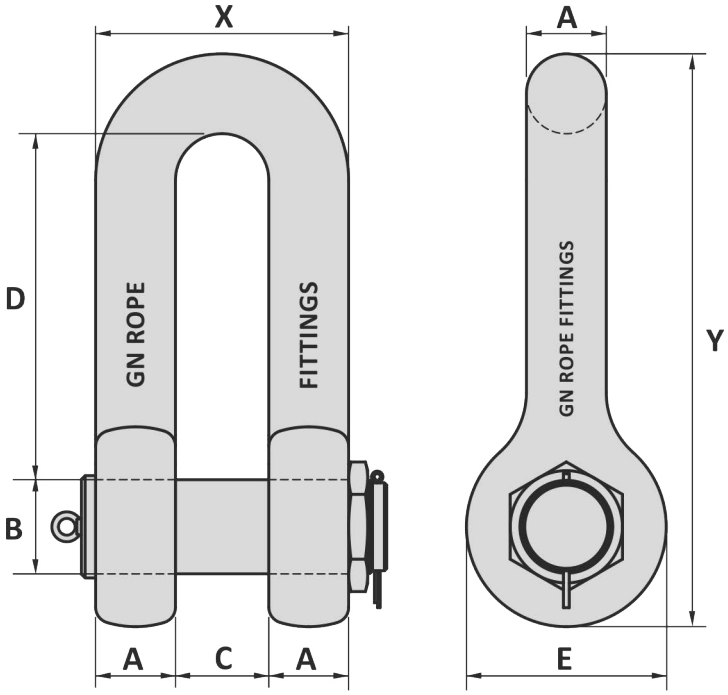

Dimensions for shackles are calculated by multiplying the common link size by the factor shown below

Dimensions related to nominal chain diameter
A = 1.2 x chain diameter
B = 1.4 x chain diameter
C = 1.4 x chain diameter
D = 5.2 x chain diameter
E = 3.0 x chain diameter
X = 3.8 x chain diameter
Y = 8.6 x chain diameter

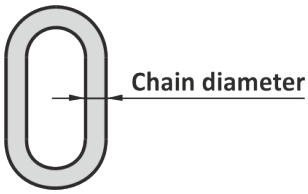

Tolerance: According ABNT NBR 13715

10-06-2014

JOINING SHACKLE WITH PEAR SHAPE PIN TYPE D16

Material	:	Alloy steel, Grade R3/R3S/R4/R4S/R5
Finish	:	Painted
Standards	:	ISO 1704
Temperature range	:	-40°C up to +200°C, Polar Rated
Standard certification	:	Certificate of Conformity 3.1 material certificate EN 10204

Also to be used for mooring applications
Non-standard sizes or custom products available on request

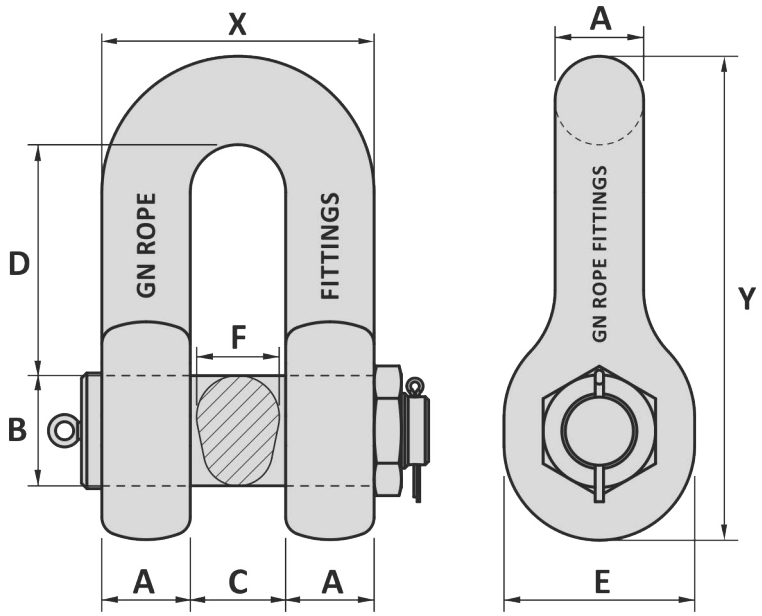

Dimensions for shackles are calculated by multiplying the common link size by the factor shown below

Dimensions related to nominal chain diameter
A = 1.3 x chain diameter
B = 1.6 x chain diameter
C = 1.4 x chain diameter
D = 3.4 x chain diameter
E = 2.8 x chain diameter
F = 1.2 x chain diameter
X = 4.0 x chain diameter
Y = 7.1 x chain diameter

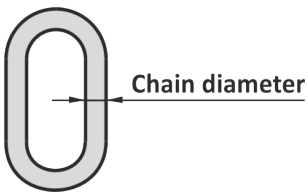

Tolerance: According ISO 1704

28-12-2017

Material	:	Alloy steel, Grade R3/R3S/R4/R4S/R5
Finish	:	Painted
Standards	:	ISO 1704
Temperature range	:	-40°C up to +200°C, Polar Rated
Standard certification	:	Certificate of Conformity 3.1 material certificate EN 10204

Also to be used for mooring applications
Non-standard sizes or custom products available on request

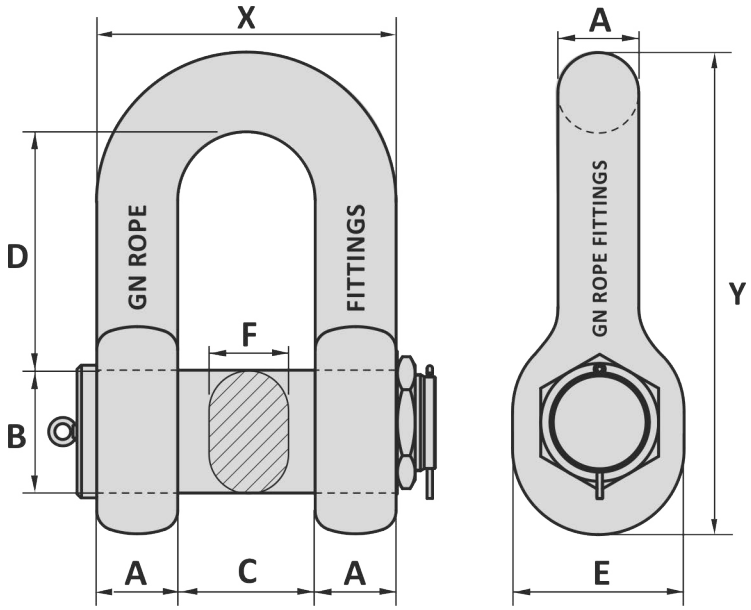

Dimensions for shackles are calculated by multiplying the common link size by the factor shown below

Dimensions related to nominal chain diameter
A = 1.4 x chain diameter
B = 1.8 x chain diameter
C = 2.4 x chain diameter
D = 4.6 x chain diameter
E = 3.1 x chain diameter
F = 1.4 x chain diameter
X = 5.2 x chain diameter
Y = 8.7 x chain diameter

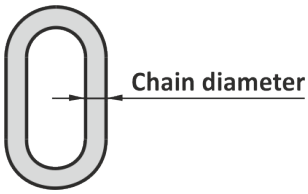

Tolerance: According ISO 1704

10-06-2014

PLATE CONNECTOR / THIMBLE SHACKLE TYPE H15

Material	:	Alloy steel, Grade R3/R3S/R4/R4S/R5
Finish	:	Painted
Temperature range	:	-40°C up to +200°C, Polar Rated
Standard certification	:	Certificate of Conformity 3.1 material certificate EN 10204

to suit: **rope - rope**
rope - chain
chain - chain

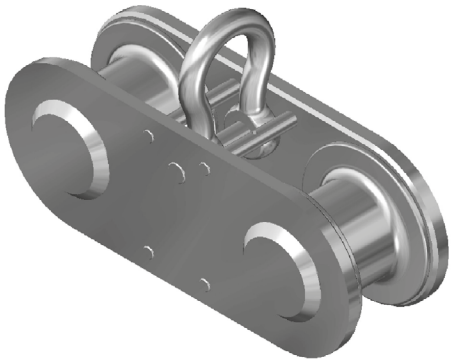

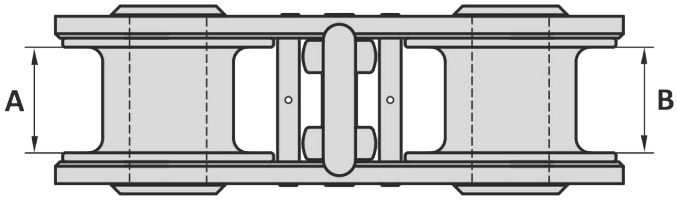

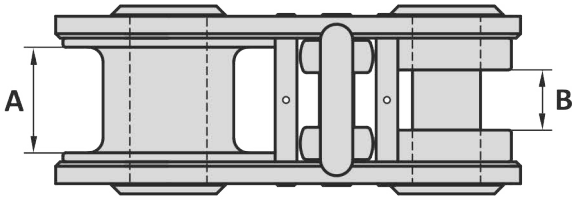

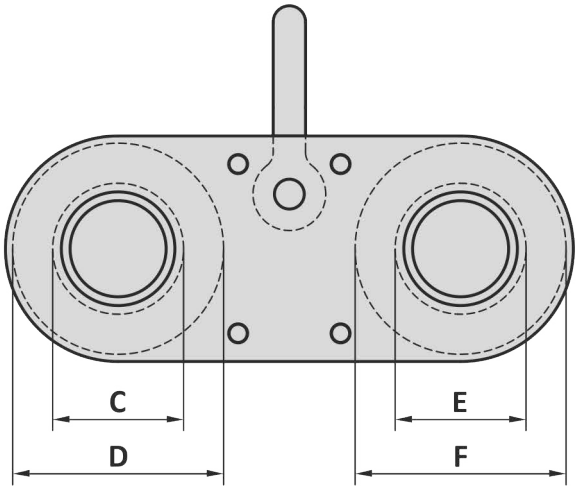

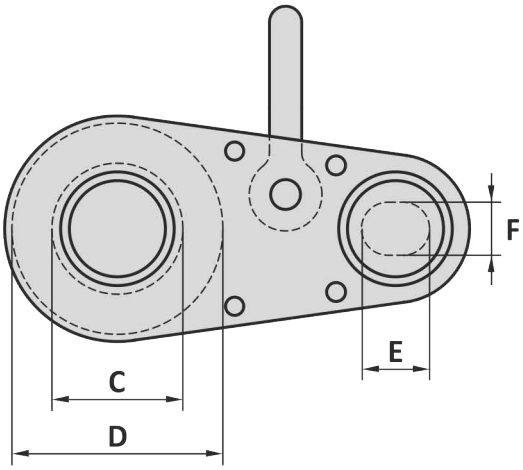

Dimensions on customer request

Available with: Tapped holes
Orkot bush
Hanger shackle

Tolerance: Machined part ± 1 mm

12-08-2014

D-SHACKLE WITH ROULETTE THIMBLE

TYPE D18

Material : Alloy steel, Grade R3/R3S/R4/R4S/R5
Finish : Shackle: Painted
Roulette thimble: Galvanized (MODU: Painted)
Temperature range : -40°C up to +200°C, Polar Rated
Standard certification : Certificate of Conformity
3.1 material certificate EN 10204

Roulette thimble also separate available, see K17

TYPE APPROVED PRODUCT
DNV·GL
OS E302

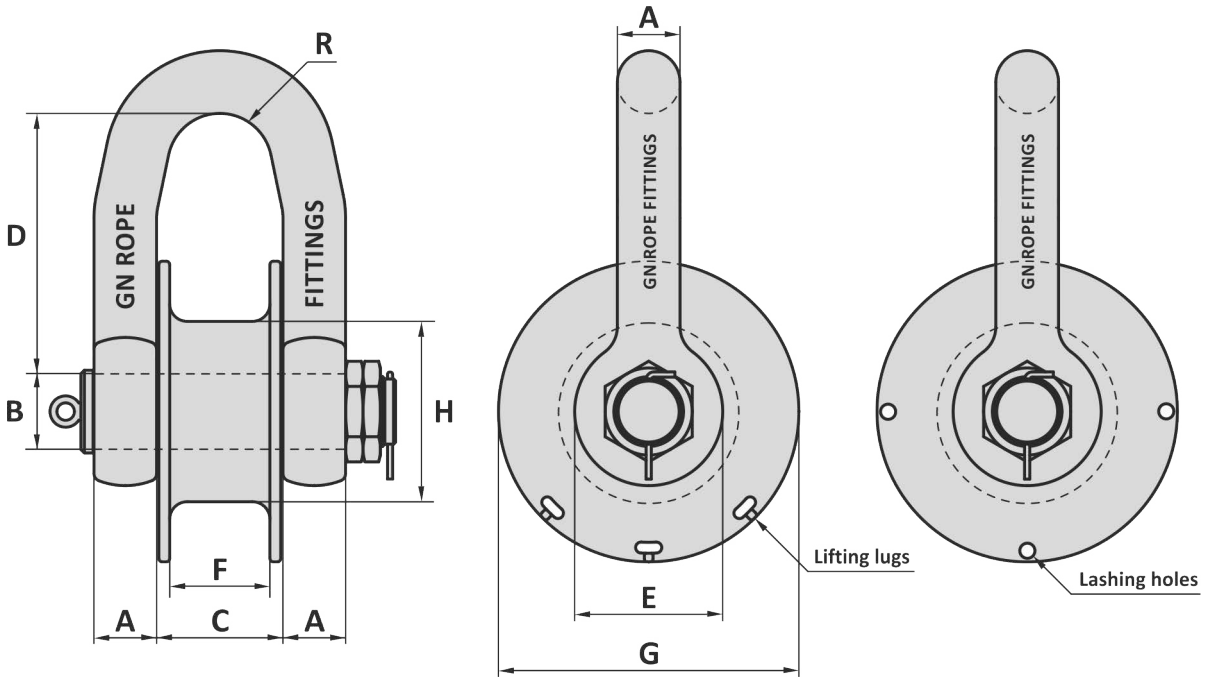

Group A Group B

Art. No. shackle	Art. No. thimble	PL kN	MBL kN	Group	A mm	B mm	C mm	D mm	E mm	F mm	G mm	H mm	R mm	Weight kg
32110140	18010580	4886	6965	A	108	125	215	545	230	160	580	360	90	409
32150190	18010690	8478	10754		144	168	290	600	340	230	690	414	120	794
32170200	18010750	10700	13573		165	180	310	600	330	250	750	450	140	974
32180200	18010750	11889	15059		175	200	310	620	370	250	750	450	130	1107
Special MODU type shackle, suitable for 76-84 mm chain with special end link														
32127145	18010144	5682	7208	B	127	145	265	600	260	205	600	390	100	553
32140159	18010610	6965	8830		140	160	270	500	305	208	610	400	100	632

Tolerance: Inside length ± 7.5%, all other forged parts ± 5%, machined parts ± 1 mm

Art. No. shackle	Art. No. thimble	PL kN	MBL kN	Group	A inch	B inch	C inch	D inch	E inch	F inch	G inch	H inch	R inch	Weight lbs
32110140	18010580	4886	6965	A	4 1/4	4 15/16	8 15/32	21 7/16	9 1/16	6 5/16	22 27/32	14 3/16	3 9/16	902
32150190	18010690	8478	10754		5 11/16	6 5/8	11 13/32	23 5/8	13 3/8	9 1/16	27 5/32	16 5/16	4 23/32	1750
32170200	18010750	10700	13573		6 1/2	7 3/32	12 3/16	23 5/8	13	9 27/32	29 17/32	17 23/32	5 1/2	2147
32180200	18010750	11889	15059		6 7/8	7 7/8	12 3/16	24 13/32	14 9/16	9 27/32	29 17/32	17 23/32	5 1/8	2441
Special MODU type shackle, suitable for 76-84 mm chain with special end link														
32127145	18010144	5682	7208	B	5	5 23/32	10 7/16	23 5/8	10 1/4	8 1/16	23 5/8	15 11/32	3 15/16	1219
32140159	18010610	6965	8830		5 1/2	6 5/16	10 5/8	19 11/16	12	8 3/16	24	15 3/4	3 15/16	1393

Tolerance: Inside length ± 7.5%, all other forged parts ± 5%, machined parts ± 1/32 inch

05-01-2018

FORGED ROULETTE THIMBLE

TYPE K17

Material	:	Alloy steel, Grade R3/R3S/R4/R4S/R5 High tensile steel
Finish	:	Painted or galvanized
Temperature range	:	-40°C up to +200°C, Polar Rated
Standard certification	:	Certificate of Conformity 3.1 material certificate EN 10204

to suit: **shackle - rope**
H- or Y-link - rope
plate connector - rope

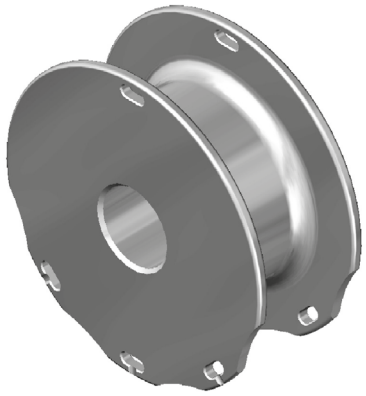

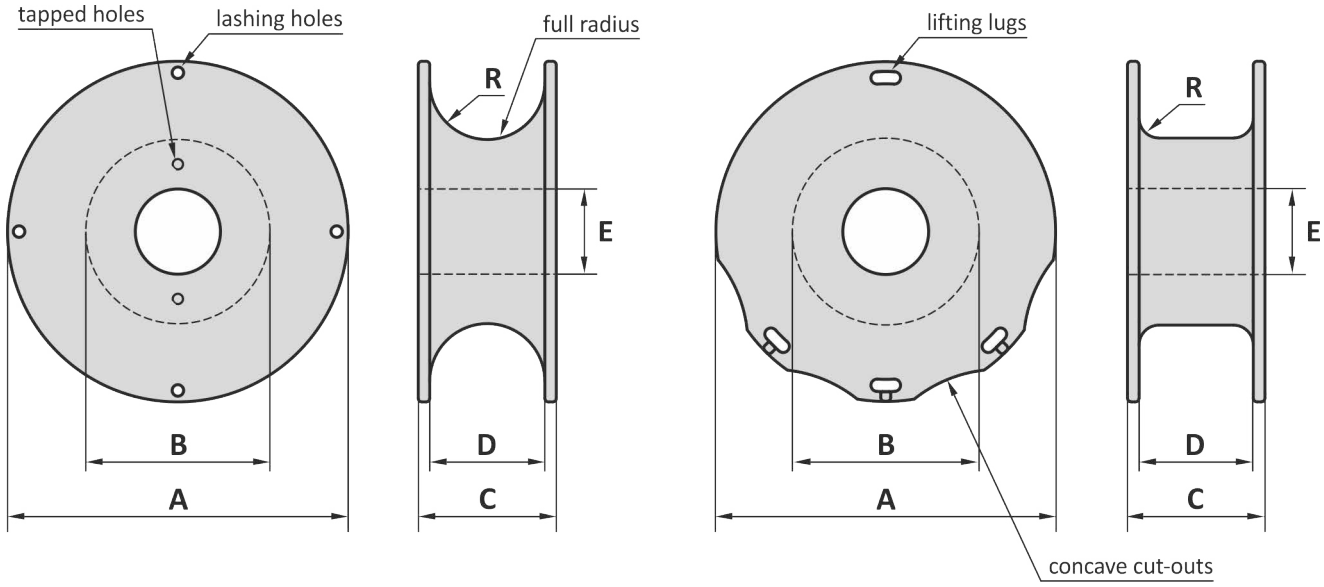

Dimensions on customer request

Available with: Lashing holes
Lifting lugs
Concave cut-outs
Full radius shape
Tapped holes (for lifting)
Orkot bush

Tolerance: Machined part ± 1 mm

14-10-2014

Material	:	Alloy steel, Grade R3/R3S/R4/R4S/R5
Finish	:	Painted
Temperature range	:	-40°C up to +200°C, Polar Rated
Standard certification	:	Certificate of Conformity 3.1 material certificate EN 10204

PMS / LTM forged sockets are prepared to operate in a wire-rope connection with a flange-mounted bending stiffner.
The stiffner protects the rope for buckling during transport and installation.

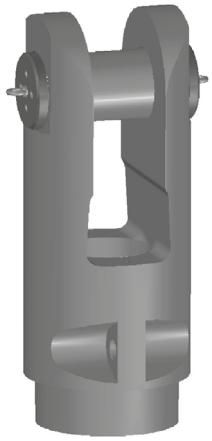

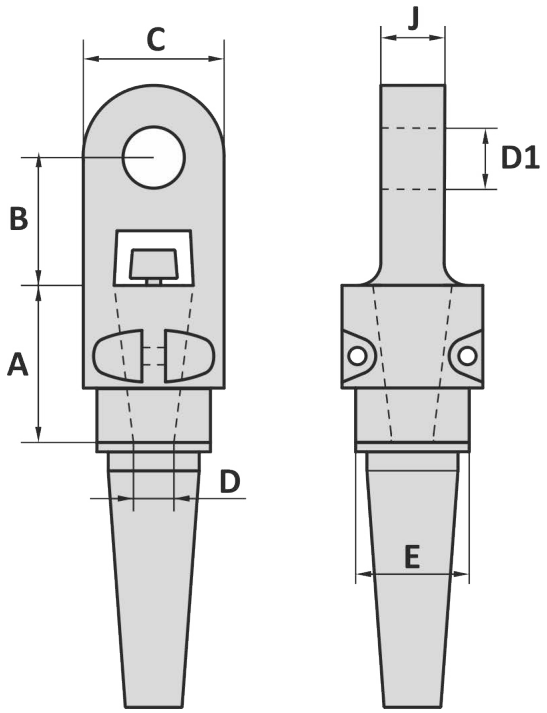

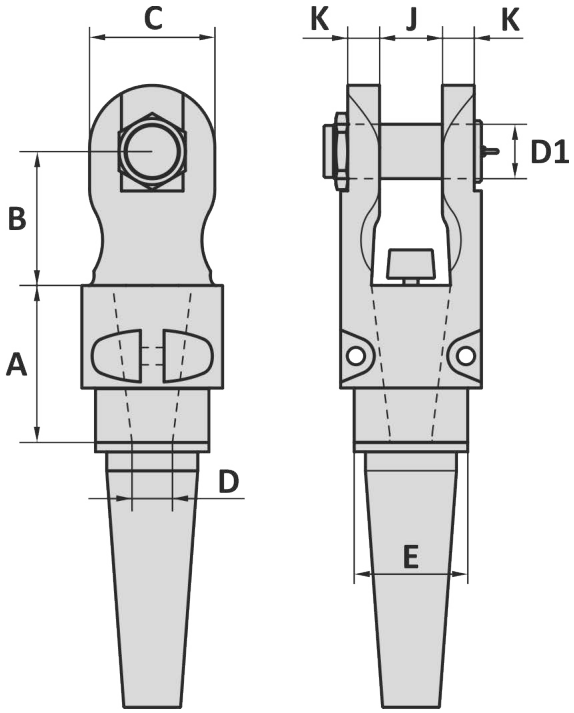

Dimensions on customer request
Available with: Tapped holes (for lifting)
Orkot isolation
Padeyes
Anode
Bend stiffner
Domed nuts
Locking system

Tolerance: Machined parts ± 1 mm

14-10-2014

CR CONNECTOR TYPE SC3

Material : Alloy steel, Grade R4
Finish : Self colored
Temperature range : -20°C up to +200°C
Standard certification : Certificate of Conformity
3.1 material certificate EN 10204

Can be assembled with our range of swivels, CR-sockets and chains

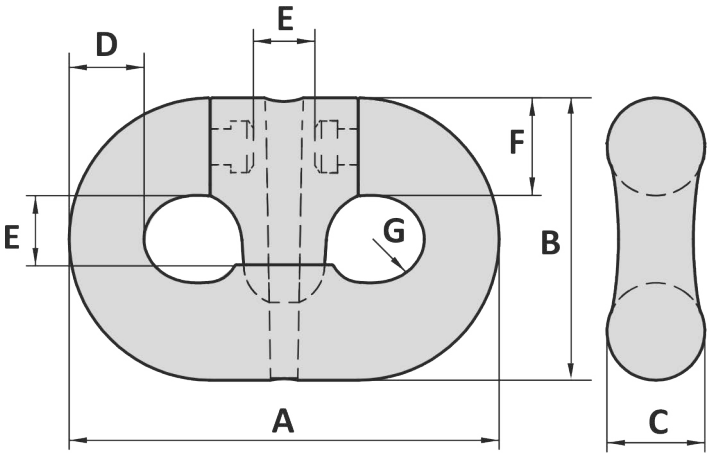

Art. No.	Chain mm	Chain inch	CR socket No.	PL kN	MBL kN	A mm	B mm	C mm	D mm	E mm	F mm	G mm	Weight kg
40000003	76	3	522 - 528	4731	6001	456	296	103	76	89	103	46	58
40000005	84	3 ¼	524 - 529	5682	7208	498	324	112	83	97	112	50	82
40000004	89	3 ½	524 - 530	6310	8004	534	347	120	89	104	120	53	95

Tolerance: Forged parts ± 5%

Art. No.	Chain mm	Chain inch	CR socket No.	PL kN	MBL kN	A inch	B inch	C inch	D inch	E inch	F inch	G inch	Weight lbs
40000003	76	3	522 - 528	4731	6001	17 15/16	11 21/32	4 1/16	3	3 ½	4 1/16	1 13/16	128
40000005	84	3 ¼	524 - 529	5682	7208	19 ⅝	12 ¾	4 13/32	3 ¼	3 13/16	4 13/32	1 31/32	181
40000004	89	3 ½	524 - 530	6310	8004	21 1/32	13 21/32	4 13/32	3 ½	4 3/32	4 23/32	2 3/32	209

Tolerance: Forged parts ± 5%

11-11-2013

Material : Alloy steel, Grade R4
Finish : Self colored
Temperature range : -20°C up to +200°C
Standard certification : Certificate of Conformity
3.1 material certificate EN 10204

Can be assembled with our range of swivels, CR-sockets and chains

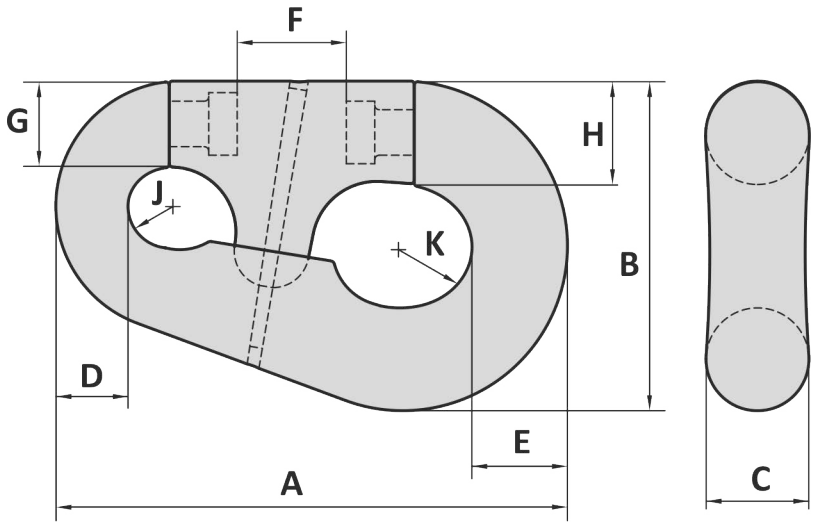

Art. No.	Type No.	Chain mm	A mm	B mm	C mm	D mm	E mm	F mm	G mm	H mm	J mm	K mm	Weight kg
40000106	6	52 - 60	480	337	103	66	83	125	81	103	43	71	61
40000107	7	62 - 79	570	370	113	85	96	155	92	113	49	70	100
40000108	8	81 - 92	655	430	131	99	129	162	119	131	58	81	150
40000110	10	97 - 102	900	580	181	127	168	192	151	181	75	104	385

Tolerance: Forged parts ± 5%

Art. No.	Type No.	Chain inch	A inch	B inch	C inch	D inch	E inch	F inch	G inch	H inch	J inch	K inch	Weight lbs
40000106	6	2 1/16 - 2 3/8	18 29/32	13 1/4	4 1/16	2 19/32	3 1/4	4 15/16	3 3/16	4 1/16	1 11/16	2 13/16	134
40000107	7	2 7/16 - 3 1/8	22 7/16	14 9/16	4 7/16	3 11/32	3 25/32	6 3/32	3 5/8	4 7/16	1 15/16	2 3/4	220
40000108	8	3 3/16 - 3 5/8	25 25/32	16 15/16	5 5/32	3 29/32	5 1/16	6 3/8	4 11/16	5 5/32	2 9/32	3 3/16	331
40000110	10	3 13/16 - 4	35 7/16	22 27/32	7 1/8	5	6 5/8	7 9/16	5 15/16	7 1/8	2 15/16	4 3/32	849

Tolerance: Forged parts ± 5%

18-06-2012

CHAIN ADAPTER WITH SPECIAL END LINK TYPE SC7

Material	:	Alloy steel, Grade R4/R5
Finish	:	Painted
Temperature range	:	-20°C up to +200°C
Standard certification	:	Certificate of Conformity 3.1 material certificate EN 10204

Non-standard sizes or custom products available on request

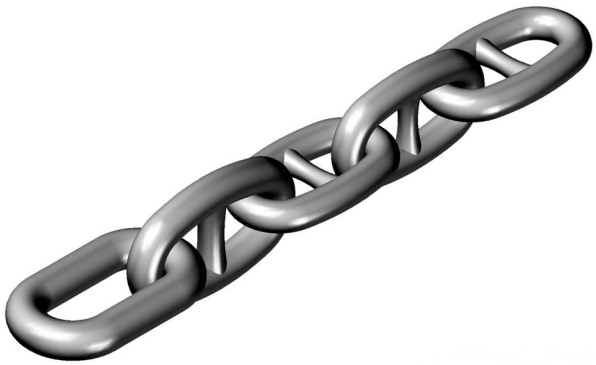

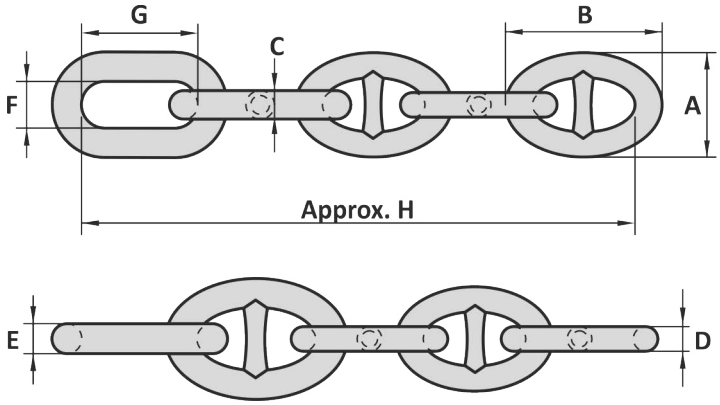

Art. No.	Chain inch	D mm	A mm	B mm	C mm	E mm	F mm	G mm	H mm	Weight kg
59999997	3	76	274	456	84	91	200	460	1706	234
59999998	3 ¼	84	302	504	105	116	200	460	1928	393

Tolerance: ± 5%

Art. No.	Chain inch	D inch	A inch	B inch	C inch	E inch	F inch	G inch	H inch	Weight lbs
59999997	3	3	10 25/32	17 15/16	3 5/16	3 19/32	7 7/8	18 1/18	67 5/32	714
59999998	3 ¼	3 5/16	11 7/8	19 27/32	4 1/8	4 9/16	7 7/8	18 1/8	75 29/32	866

Tolerance: ± 5%

28-11-2017

Material	:	Alloy steel, Grade R3/R3S/R4/R4S/R5
Finish	:	Painted
Temperature range	:	-40°C up to +200°C, Polar Rated
Standard certification	:	Certificate of Conformity 3.1 material certificate EN 10204

to suit: **chain - chain**
chain - socket
chain - triaplate

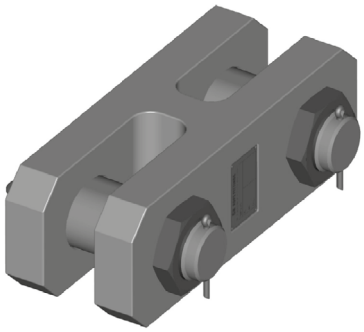

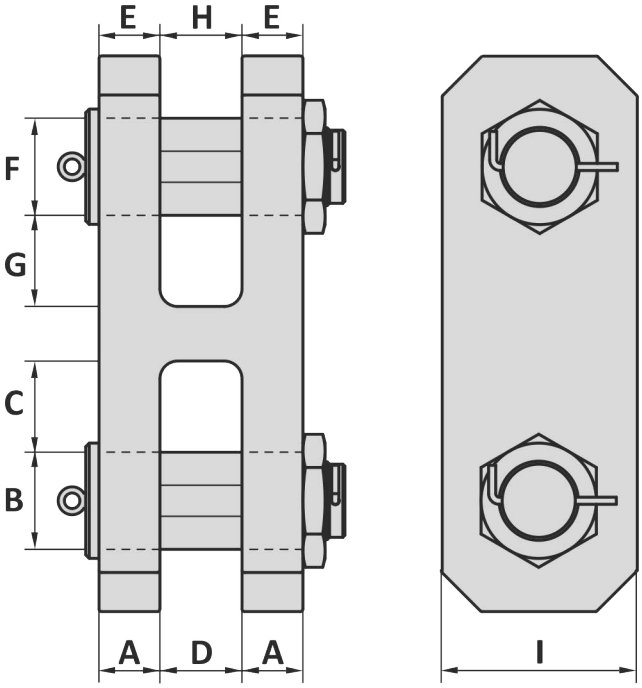

Dimensions related to nominal chain diameter

Special sizes on request
Classification Design Approval
Also available with: ROV modification
Orkot bush
Pad eye

Tolerance: Machined part ± 1 mm

08-07-2015

Material	:	Alloy steel, Grade R3/R3S/R4/R4S/R5
Finish	:	Painted
Temperature range	:	-40°C up to +200°C, Polar Rated
Standard certification	:	Certificate of Conformity 3.1 material certificate EN 10204

to suit: **chain - chain**
chain - socket

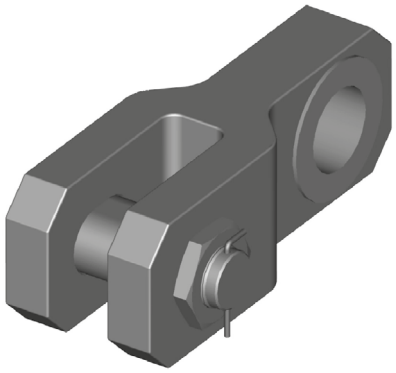

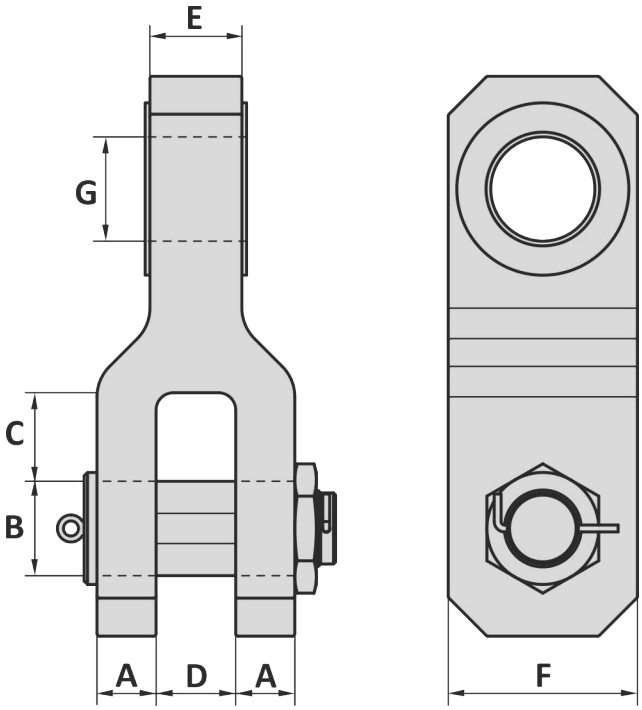

Dimensions related to nominal chain diameter

Special sizes on request
Classification Design Approval
Also available with: ROV modification
Orkot bush
Pad eye

Tolerance: Machined part ± 1 mm

08-07-2015

Material	:	Alloy steel, Grade R3/R3S/R4/R4S/R5
Finish	:	Painted
Temperature range	:	-40°C up to +200°C, Polar Rated
Standard certification	:	Certificate of Conformity 3.1 material certificate EN 10204

Non-standard sizes or custom products available on request

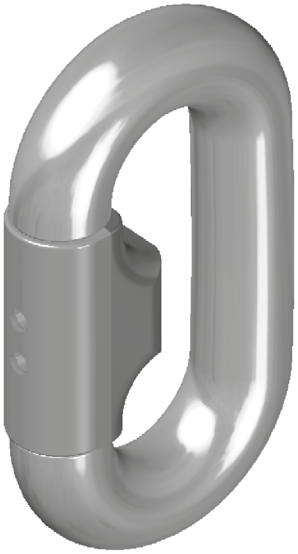

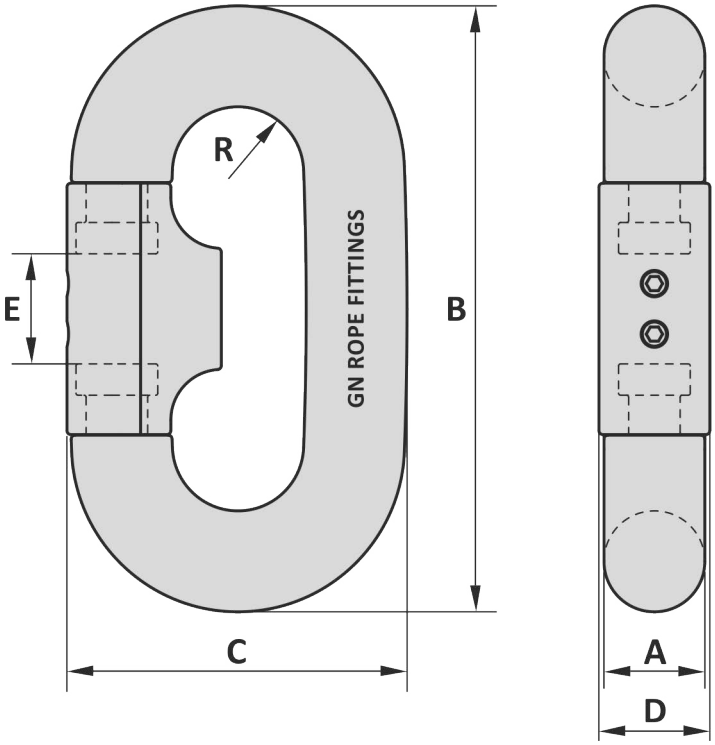

Dimensions for shackles are calculated by multiplying the common link size by the factor shown below

Dimensions related to nominal chain diameter
A = 1.00 x chain diameter
B = 6.00 x chain diameter
C = 3.37 x chain diameter
D = 1.10 x chain diameter
E = 1.09 x chain diameter
R = 0.65 x chain diameter

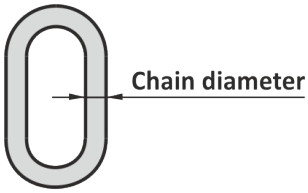

Tolerance: Machined parts ± 1 mm

17-09-2015

CR-D ROPE SWIVEL

TYPE SW5

Material : Alloy steel
Safety factor : 5 times
Finish : Painted
Temperature range : -20°C up to +200°C
Standard certification : Certificate of Conformity

Suitable for use common studless links and end links
Non-standard sizes or custom products available on request

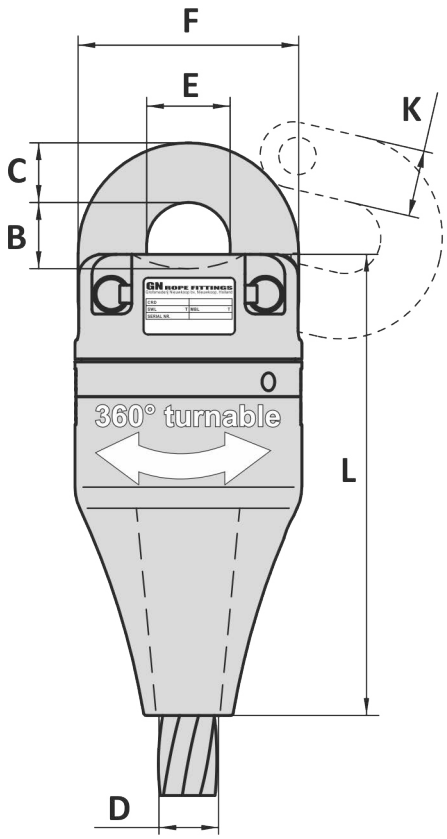

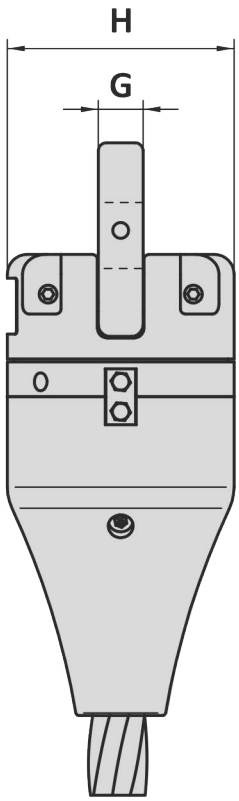

Art. No.	Type No.	Wire dia inch	Suitable chain	WLL ton	MBL ton	B mm	C mm	D mm	E mm	F mm	G mm	H mm	K mm	L mm	Weight kg
47050250	722	2 - 2 ¼	2	50	250	70	60	59	84	222	45	238	69	463	102
47050600	728	3 - 3 ¼	3	120	600	120	100	86	112	340	70	378	114	678	386
47050800	730	3 ½ - 3 ¾	3 ½	160	800	152	120	99	140	400	80	420	130	770	561

Tolerance: ± 5%, machined parts ± 1 mm

Art. No.	Type No.	Wire dia inch	Suitable chain	WLL ton	MBL ton	B inch	C inch	D inch	E inch	F inch	G inch	H inch	K inch	L inch	Weight lbs
47050250	722	2 - 2 ¼	2	50	250	2 ¾	2 ⅜	2 5/16	3 5/16	8 ¾	1 25/32	9 ⅜	2 23/32	18 7/32	225
47050600	728	3 - 3 ¼	3	120	600	4 23/32	3 15/16	3 ⅜	4 13/32	13 ⅜	2 ¾	14 ⅞	4 ½	26 11/16	851
47050800	730	3 ½ - 3 ¾	3 ½	160	800	6	4 23/32	3 29/32	5 ½	15 ¾	3 5/32	16 17/32	5 ⅛	30 5/16	1237

Tolerance: ± 5%, machined parts ± 1/32 inch

04-12-2014

Material : Alloy steel, Grade R4/R5
Finish : Painted
Temperature range : -20°C up to +200°C
Standard certification : Certificate of Conformity
3.1 material certificate EN 10204

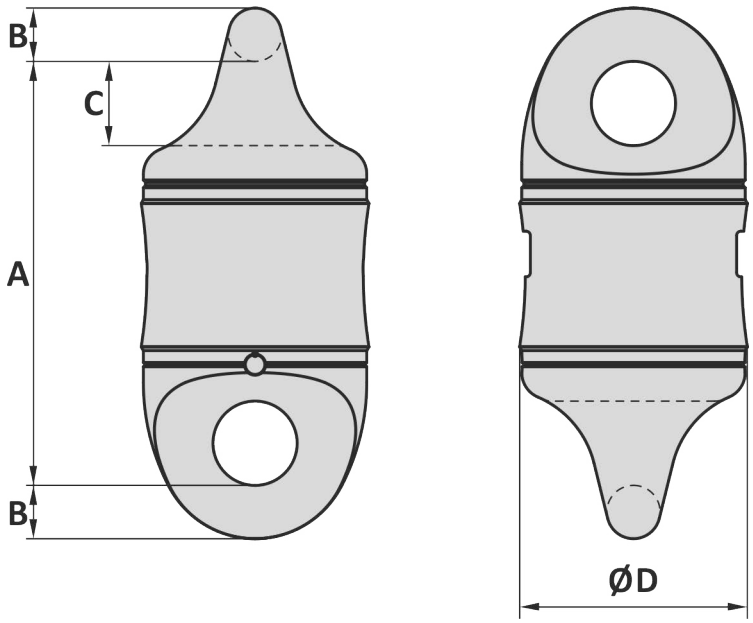

Art. No.	Size inch	Kenter inch	R4 PL kN	R4 MBL kN	R5 PL kN	R5 MBL kN	A mm	B mm	C mm	D mm	Weight kg
47060400	2 ½	2 ½ - 3	3440	4364	3997	5096	540	64	100	275	187
47060600	3	3 - 3 ½	4731	6001	5498	7009	605	76	120	325	284
47060800	3 ½	3 ½ - 4	6310	8004	7332	9348	670	89	140	380	427

Tolerance: ± 5%, machined parts ± 1 mm

Art. No.	Size inch	Kenter inch	R4 PL kN	R4 MBL kN	R5 PL kN	R5 MBL kN	A inch	B inch	C inch	D inch	Weight lbs
47060400	2 ½	2 ½ - 3	3440	4364	3997	5096	21 ¼	2 ½	3 15/16	10 13/16	412
47060600	3	3 - 3 ½	4731	6001	5498	7009	23 13/16	3	4 23/32	12 13/16	626
47060800	3 ½	3 ½ - 4	6310	8004	7332	9348	26 ⅜	3 ½	5 ½	14 31/32	941

Tolerance: ± 5%, machined parts ± 1/32 inch

04-01-2017

KS HOOK

TYPE HK12

Material : Alloy steel, Grade R3/R3S/R4/R4S
Finish : Painted, special specifications on request
Temperature range : -40°C up to +200°C, Polar Rated
Standard certification : Certificate of Conformity
3.1 material certificated EN 10204

Non-standard sizes or custom products available on request

TYPE APPROVED PRODUCT
DNV·GL
OS E302

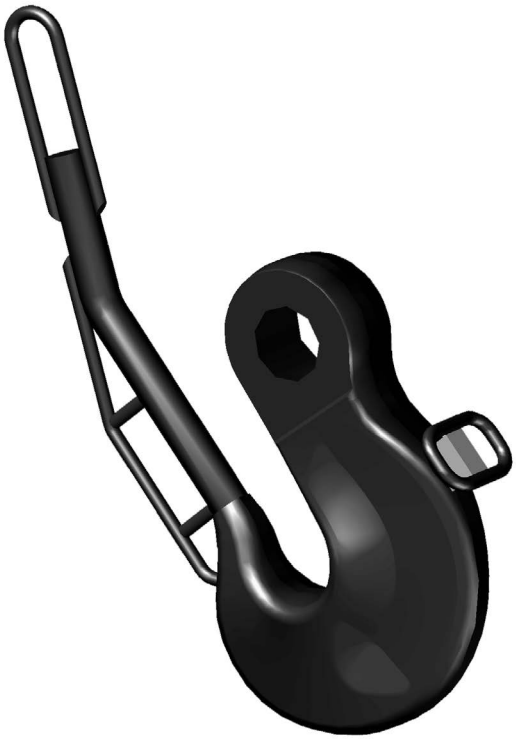

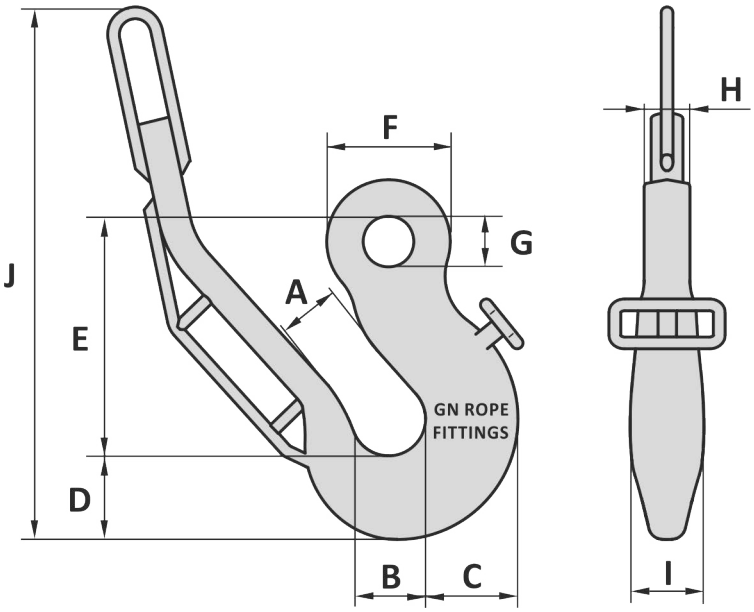

Art. No.	Hook No.	PL kN	MBL kN	A mm	B mm	C mm	D mm	E mm	F mm	G mm	H mm	I mm	J mm	Weight kg
53100040	40	7096	9001	162	200	250	225	645	334	135	131	200	1539	394
53100050	50	10700	13573	180	200	272	256	665	345	170	163	245	1443	481

Tolerance: ± 5%

Art. No.	Hook No.	PL kN	MBL kN	A inch	B inch	C inch	D inch	E inch	F inch	G inch	H inch	I inch	J inch	Weight lbs
53100040	40	7096	9001	6 3/8	7 7/8	9 27/32	8 7/8	25 3/8	13 5/32	5 5/16	5 5/32	7 7/8	60 19/32	869
53100050	50	10700	13573	7 3/32	7 7/8	10 23/32	10 1/16	26 3/16	13 19/32	6 11/16	6 13/32	9 21/32	56 13/16	1060

Tolerance: ± 5%

01-07-2014

Material : Alloy steel, Grade R4/R5
Safety factor : 5 times
Finish : Painted
Temperature range : -40°C up to +200°C, Polar Rated
Standard certification : Certificate of Conformity
3.1 material certificated EN 10204

Non-standard sizes or custom products available on request

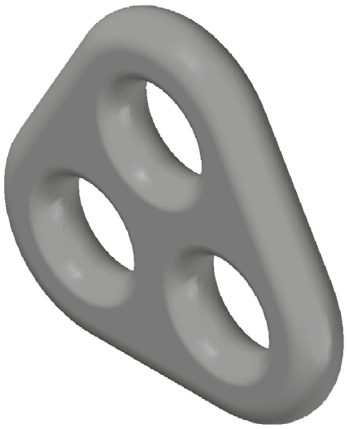

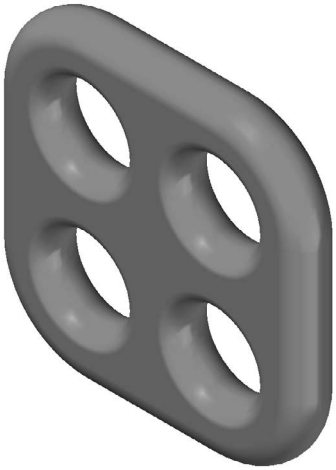

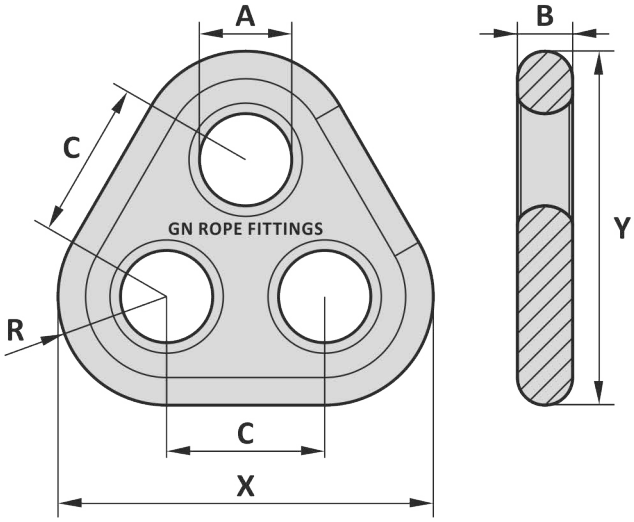

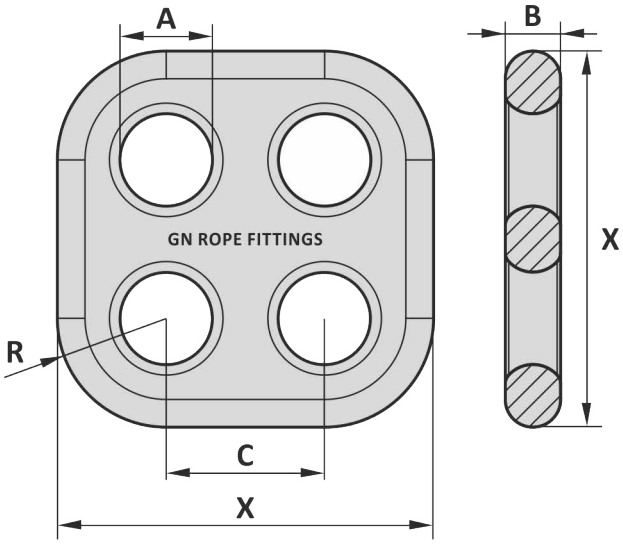

Art. No. Triangle plate	Chain mm	PL kN	MBL kN	A mm	B mm	C mm	R mm	X mm	Y mm	Weight kg
75007684	76-84	5682	7208	140	84	240	165	570	538	104
Quad plate										
76007684	76-84	5682	7208	140	84	240	165	570		138

Tolerance: Machined parts ± 1 mm

Art. No. Triangle plate	Chain mm	PL kN	MBL kN	A inch	B inch	C inch	R inch	X inch	Y inch	Weight lbs
75007684	76-84	5682	7208	5 ½	3 5/16	9 7/16	6 ½	22 7/16	21 3/16	229
Quad plate										
76007684	76-84	5682	7208	5 ½	3 5/16	9 7/16	6 ½	22 7/16		304

Tolerance: Machined parts ± 1/32 mm

17-09-2015

NOTES

BL1
Vertical lead sheave

BL4
Horizontal lead sheave

BL2
Snatch block with safety window

BL3
Snatch block for shackle liting

T2
Heavy duty turnbuckle

TF1
Tuningfork

TR1
Triangle plate

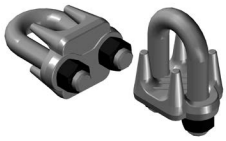

WC1
Wire rope clip

VERTICAL LEAD SHEAVE TYPE BL1

Material	:	High tensile steel
Finish	:	Painted
Temperature range	:	-20°C up to +200°C
Standard certification	:	Certificate of Conformity

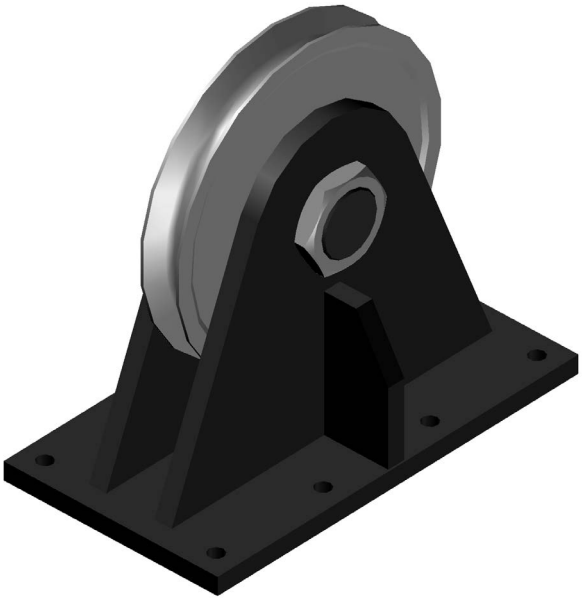

HORIZONTAL LEAD SHEAVE TYPE BL4

Material	:	High tensile steel
Finish	:	Painted
Temperature range	:	-20°C up to +200°C
Standard certification	:	Certificate of Conformity

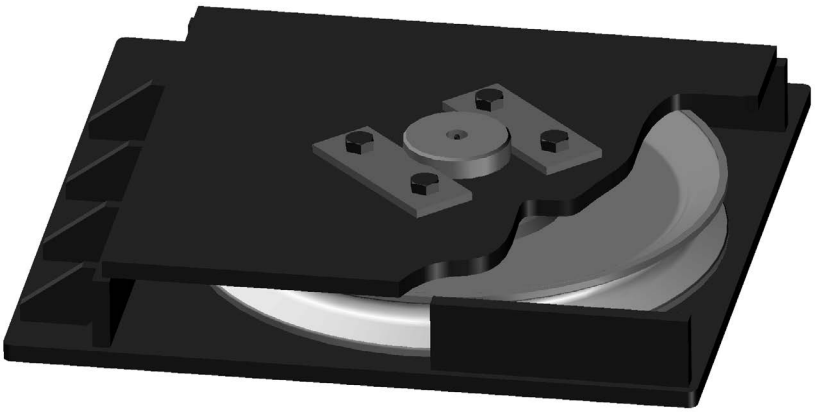

01-07-2011

SNATCH BLOCK WITH SAFETY WINDOW TYPE BL2

Material : Mild steel
Safety factor : 4 times
Finish : Painted
Temperature range : -20°C up to +200°C
Standard certification : Certificate of Conformity

Sheaves with bronze bearing,
Sheaves with roller bearing on requested

Groove size can be changed on request for bigger rope sizes

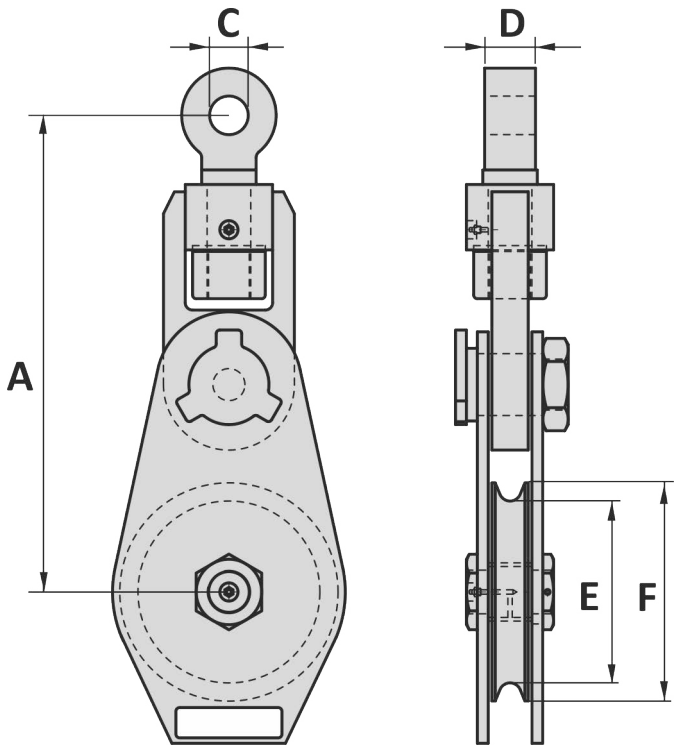

Art. No.	Type No.	WLL ton	Rope size mm	Line pull ton	A mm	C mm	D mm	E mm	F mm	Weight kg
20143118	SH43118	35	32 - 38	17.5	680	60	80	380	450	160
20143224	SH43224	55	38 - 42	27.5	850	73	100	520	605	260
20143230	SH43230	85	44 - 48	42.5	1020	85	120	640	760	484
20143234	SH43234	120	50 - 55	60	1190	100	140	740	860	740
20143236	SH43236	150	60 - 70	75	1320	113	160	760	910	992
20143242	SH43242	200	75 - 85	100	1490	135	170	870	1060	1573
20143246	SH43246	250	88 - 93	125	1645	145	190	970	1170	2097

Tolerance: Machined parts ± 1 mm

Art. No.	Type No.	WLL ton	Rope size mm	Line pull ton	A inch	C inch	D inch	E inch	F inch	Weight lbs
20143118	SH43118	35	32 - 38	17.5	26 25/32	2 3/8	3 5/32	14 31/32	17 23/32	353
20143224	SH43224	55	38 - 42	27.5	33 15/32	2 7/8	3 15/16	20 15/32	23 13/16	573
20143230	SH43230	85	44 - 48	42.5	40 5/32	3 11/32	4 23/32	25 3/16	29 15/16	1067
20143234	SH43234	120	50 - 55	60	46 27/32	3 15/16	5 1/2	29 1/8	33 7/8	1631
20143236	SH43236	150	60 - 70	75	51 31/32	4 7/16	6 5/16	29 15/16	35 13/16	2187
20143242	SH43242	200	75 - 85	100	58 21/32	5 5/16	6 11/16	34 1/4	41 3/4	3468
20143246	SH43246	250	88 - 93	125	64 3/4	5 23/32	7 15/32	38 3/16	46 1/16	4623

Tolerance: Forged parts ± 5%, machined parts ± 1/32 inch

21-06-2018

SNATCH BLOCK FOR SHACKLE LIFTING TYPE BL3

Material : Mild steel
Safety factor : 4 times
Finish : Painted
Temperature range : -4°F up to +392°F
Standard certification : Certificate of Conformity

Sheave with bronze bearing,
Sheaves with roller bearing on requested

Groove size can be changed on request for bigger rope sizes

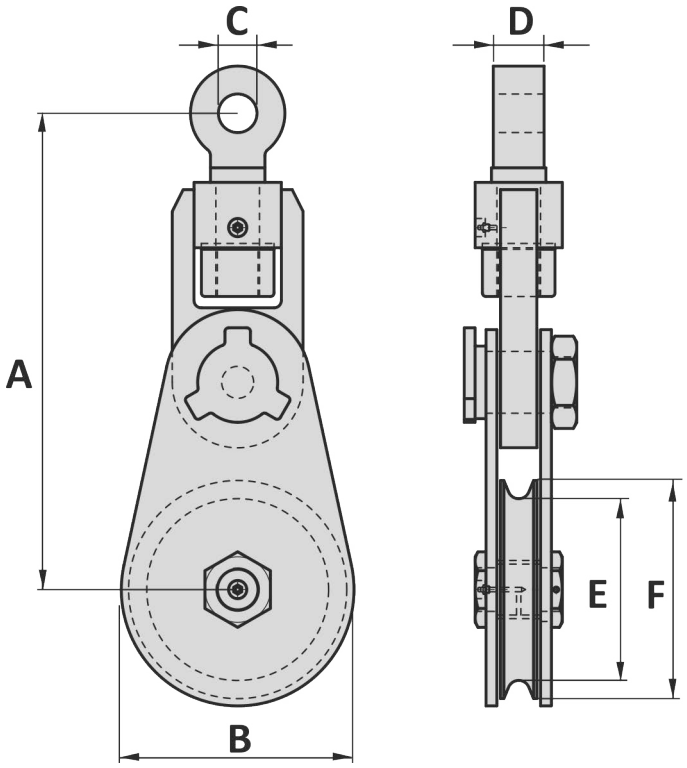

Art. No. Light Type	Type No.	WLL eye pull ton	WLL line pull ton	Rope size inch	Rope size mm	A inch	B inch	C inch	D inch	E inch	F inch	Weight lbs
20041903	H41903	3.25	1.62	⅜	8 - 10	7 13/32	3 7/32	25/32	1 1/32	2 3/16	3	8.8
20041905	H41905	4.75	2.37	½	11 - 14	9 27/32	4 13/16	15/16	1 3/16	3 ⅜	4 ½	20
20041906	H41906	8.5	4.25	¾	18 - 20	14	6 ⅜	1 3/16	1 9/16	4 13/32	6	42
20041908	H41908	8.5	4.25	¾	18 - 20	15	8 ½	1 3/16	1 9/16	6 13/32	8	53
20041910	H41910	9.5	4.75	¾	18 - 20	16	10 ⅝	1 11/32	1 ¾	8 7/16	10	66
20041912	H41912	9.5	4.75	¾	18 - 20	17 9/16	12 19/32	1 11/32	1 ¾	10 7/16	12	86
20041914	H41914	12	6	¾	18 - 20	20 5/16	15 19/32	1 7/16	1 ⅞	12 13/32	14 ⅜	110
20041916	H41916	13.5	6.75	⅞	22 - 25	25 ⅜	17	1 21/32	2 ⅛	14	16	205
20041918	H41918	17	8.5	1	22 - 25	27 5/32	19 9/32	1 ¾	2 ¼	16 1/16	18 1/32	247
Heavy Type												
20043106	H43106	17	8.5	1	22 - 25	19 9/32	6 5/16	1 ¾	2 ¼	4 5/16	5 29/32	108
20043108	H43108	25	12.5	1 ⅛	25 - 28	23 11/16	8 21/32	2 3/32	2 ¾	5 29/32	7 ⅞	172
20043110	H43110	25	12.5	1 ¼	28 - 32	24 ⅞	10 ⅝	2 3/32	2 ¾	7 15/32	9 27/32	203
20043112	H43112	25	12.5	1 ¼	28 - 32	26 1/16	12 19/32	2 3/32	2 ¾	9 7/16	11 13/16	247
20043114	H43114	25	12.5	1 ¼	28 - 32	27 ¼	14 4/7	2 3/32	2 ¾	11 13/32	13 25/32	280
20043118	H43118	35	17.5	1 ½	32 - 38	32 ⅞	18 ½	2 ⅜	3 5/32	14 31/32	17 23/32	470
20043120	H43120	35	17.5	1 ½	32 - 38	34 1/16	20 15/32	2 ⅜	3 5/32	16 15/16	19 11/16	536
20043124	H43124	35	17.5	1 ½	32 - 38	36 13/32	24 ⅝	2 ⅜	3 5/32	21 1/16	23 13/16	679
20043224	H43224	55	27.5	1 ⅝	38 - 42	40 15/16	24 ⅝	2 ⅞	3 15/16	20 15/32	23 13/16	990
20043230	H43230	85	42.5	1 ⅞	44 - 48	47 23/32	30 23/32	3 11/32	4 23/32	24 13/16	29 17/32	2068
20043234	H43234	120	60	2	50 - 55	52 ¼	34 ⅔	3 15/16	5 ½	29 ⅛	33 ⅞	2908
20043236	H43236	150	75	2 ½	60 - 70	56 3/16	36 ⅝	4 7/16	6 5/16	29 15/16	35 13/16	3527
20043242	H43242	200	100	3	75 - 85	64 3/16	42 ½	5 5/16	6 11/16	34 ¼	41 ¾	5038
20043246	H43246	250	125	3 ½	88 - 93	70 9/32	46 27/32	5 23/32	7 15/32	38 3/16	46 1/16	6647

Tolerance: Forged parts ± 5%, machined parts ± 1/32 inch

20-11-2014

SNATCH BLOCK FOR SHACKLE LIFTING TYPE BL3

Material : Mild steel
Safety factor : 4 times
Finish : Painted
Temperature range : -20°C up to +200°C
Standard certification : Certificate of Conformity

Sheave with bronze bearing,
Sheaves with roller bearing on requested

Groove size can be changed on request for bigger rope sizes

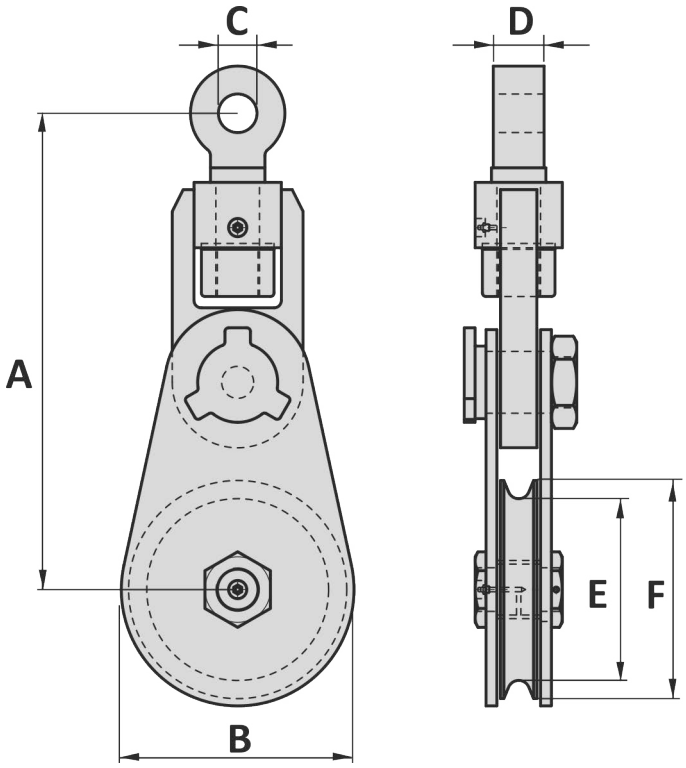

Art. No.	Type No.	WLL eye pull	WLL line pull	Rope size	Rope size	A	B	C	D	E	F	Weight
Light Type		ton	ton	inch	mm	mm	mm	mm	mm	mm	mm	kg
20041903	H41903	3.25	1.62	⅜	8 - 10	188	82	20	26	56	76	4
20041905	H41905	4.75	2.37	½	11 - 14	250	122	24	30	86	114	9
20041906	H41906	8.5	4.25	¾	18 - 20	356	162	30	40	112	152	19
20041908	H41908	8.5	4.25	¾	18 - 20	381	216	30	40	163	203	24
20041910	H41910	9.5	4.75	¾	18 - 20	406	270	34	44	214	254	30
20041912	H41912	9.5	4.75	¾	18 - 20	446	320	34	44	265	305	39
20041914	H41914	12	6	¾	18 - 20	516	396	37	48	315	365	50
20041916	H41916	13.5	6.75	⅞	22 - 25	645	430	42	54	356	406	93
20041918	H41918	17	8.5	1	22 - 25	690	490	44	57	408	458	112
Heavy Type												
20043106	H43106	17	8.5	1	22 - 25	490	160	44	57	110	150	49
20043108	H43108	25	12.5	1 ⅛	25 - 28	602	220	53	70	150	200	78
20043110	H43110	25	12.5	1 ¼	28 - 32	632	270	53	70	190	250	92
20043112	H43112	25	12.5	1 ¼	28 - 32	662	320	53	70	240	300	112
20043114	H43114	25	12.5	1 ¼	28 - 32	692	370	53	70	290	350	127
20043118	H43118	35	17.5	1 ½	32 - 38	835	470	60	80	380	450	213
20043120	H43120	35	17.5	1 ½	32 - 38	865	520	60	80	430	500	243
20043124	H43124	35	17.5	1 ½	32 - 38	925	625	60	80	535	605	308
20043224	H43224	55	27.5	1 ⅝	38 - 42	1040	625	73	100	520	605	449
20043230	H43230	85	42.5	1 ⅞	44 - 48	1212	780	85	120	630	750	938
20043234	H43234	120	60	2	50 - 55	1327	880	100	140	740	860	1319
20043236	H43236	150	75	2 ½	60 - 70	1427	930	113	160	760	910	1600
20043242	H43242	200	100	3	75 - 85	1630	1080	135	170	870	1060	2285
20043246	H43246	250	125	3 ½	88 - 93	1785	1190	145	190	970	1170	3015

Tolerance: Forged parts ± 5%, machined parts ± 1 mm

20-11-2014

HEAVY DUTY TURNBUCKLE TYPE T2

Material	:	High tensile steel
Safety factor	:	5 times
Finish	:	Painted
Temperature range	:	-4°F up to +392°F
Standard certification	:	Certificate of Conformity

This type of rigging screws meets the requirements as laid down in the Dutch, British, American and other dock regulations.
On request deliverable with 2 securing nuts or plates.
Custom designed screws can be constructed in any size and capacity.
Rigging screws are supplied with trapezium thread.

Non-standard sizes or custom products available on request

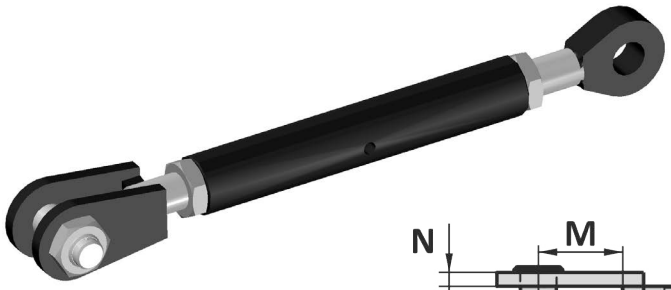

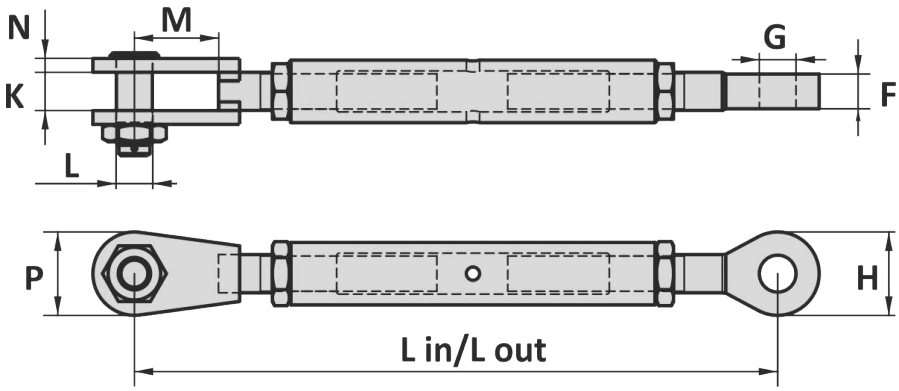

WLL ton	Art. No Jaw-Jaw	L in inch	L out inch	Art. No Eye-Eye	L in inch	L out inch	Art. No Jaw-Eye	L in inch	L out inch	Thread
13.5	42013000	36 13/16	49 5/8	42013001	33 1/16	45 7/8	42013002	35 1/32	47 27/32	Tr 55x8
17	42017000	39 3/4	53 9/16	42017001	36 7/32	50	42017002	38	51 25/32	Tr 65x8
25	42025000	42 23/32	55 23/32	42025001	38 3/8	51 3/8	42025002	40 9/16	53 9/16	Tr 70x8
30	42030000	45 11/16	60 1/4	42030001	40 5/32	54 23/32	42030002	42 29/32	57 15/32	Tr 75x8
35	42035000	49 7/32	64 31/32	42035001	43 5/16	59 1/16	42035002	46 1/4	62	Tr 80x8
45	42045000	51 3/16	70 1/16	42045001	46 1/16	64 31/32	42045002	48 5/8	67 1/2	Tr 90x8
55	42055000	54 5/16	74 13/32	42055001	50	70 1/16	42055002	52 5/32	72 1/4	Tr 100x8
70	42070000	58 1/4	79 23/32	42070001	54 23/32	76 3/8	42070002	56 1/2	78 5/32	Tr 110x8
85	42085000	61 5/8	86 5/8	42085001	59 21/32	84 21/32	42085002	60 5/8	85 5/8	Tr 120x8
100	42100000	64 3/16	92 29/32	42100001	63	91 3/4	42100002	63 19/32	92 5/16	Tr 130x8
120	42120000	68 11/16	92 1/8	42120001	68 5/16	91 3/4	42120002	68 1/2	91 15/16	Tr 140x8
160	42160000	73 5/8	97 1/4	42160001	73 7/32	96 27/32	42160002	73 7/16	97 1/16	Tr 160x8
200	42200000	79 17/32	103 15/16	42200001	78 3/4	103 5/32	42200002	79 1/8	103 9/16	Tr 180x8
250	42250000	85 7/16	111 13/16	42250001	87	113 3/8	42250002	86 7/32	112 19/32	Tr 200x8

WLL ton	K inch	N inch	M inch	L inch	P inch	F inch	H inch	G inch	Weight J-J lbs	Weight E-E lbs	Weight J-E lbs
13.5	2 5/32	25/32	4 13/16	2	4 23/32	1 31/32	4 23/32	2 3/32	99	79	90
17	2 9/16	1 3/32	5 1/8	2 15/32	5 1/2	2 5/32	5 1/2	2 9/16	159	121	137
25	3	1 3/16	5 23/32	2 3/4	5 1/2	2 3/4	5 1/2	2 27/32	183	132	161
30	3 5/32	1 3/8	6 5/16	2 27/32	5 29/32	2 3/4	5 29/32	2 29/32	220	150	187
35	3 9/16	1 9/16	6 7/8	3 5/32	6 11/16	3 5/32	6 11/16	3 7/32	309	212	258
45	3 15/16	1 25/32	6 7/8	3 9/16	7 15/32	3 9/16	7 15/32	3 21/32	390	258	322
55	4 5/16	1 31/32	6 7/8	3 15/16	8 1/4	3 15/16	8 1/4	4 1/16	511	344	428
70	4 5/16	2 5/32	6 7/8	4 1/4	9 1/16	3 15/16	9 1/16	4 3/8	646	441	540
85	5 1/8	2 15/16	6 7/8	5	10 5/8	4 15/16	10 5/8	5 1/8	972	595	800
100	5 1/2	3 9/16	6 7/8	5 1/2	11 13/32	4 15/16	11 13/32	5 5/8	1338	802	1069
120	6 3/32	3 9/16	7 15/32	6	13 3/8	5 1/2	13 3/8	6 3/32	1631	1080	1356
160	6 11/16	3 15/16	8 1/4	7	14 31/32	6 5/16	14 31/32	7 1/8	2132	1354	1744
200	7 15/32	4 5/16	9 27/32	7 15/32	15 3/4	6 11/16	15 3/4	7 19/32	3042	1587	2315
250	8 1/4	4 23/32	11 1/32	9 27/32	20 15/32	7 15/32	20 15/32	9 31/32	4023	1834	2965

Tolerance: Forged parts ± 5%, machined parts ± 1/32 inch

01-08-2012

Material : High tensile steel
Safety factor : 5 times
Finish : Painted
Temperature range : -20°C up to +200°C
Standard certification : Certificate of Conformity

This type of rigging screws meets the requirements as laid down in the Dutch, British, American and other dock regulations.
On request deliverable with 2 securing nuts or plates.
Custom designed screws can be constructed in any size and capacity.
Rigging screws are supplied with trapezium thread.

Non-standard sizes or custom products available on request

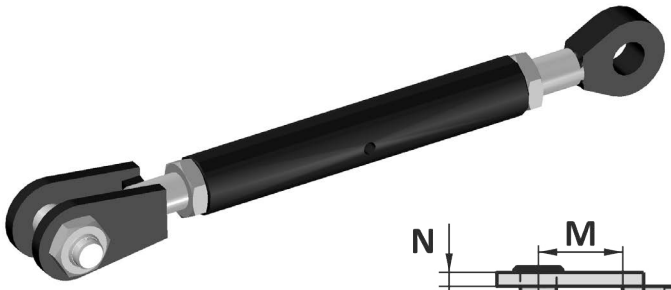

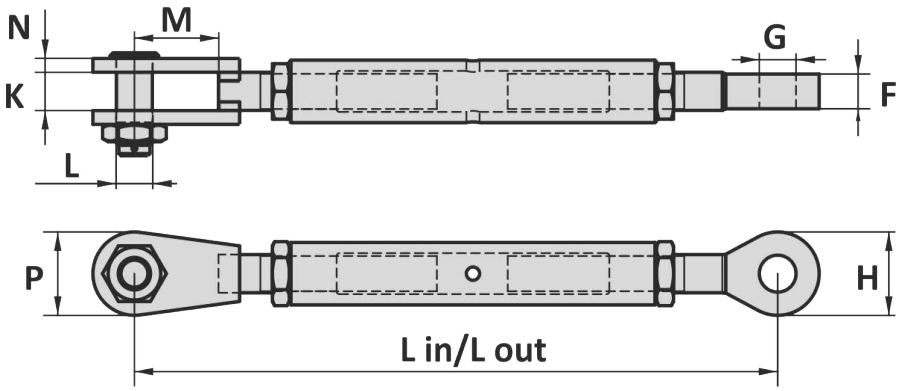

WLL ton	Art. No Jaw-Jaw	L in mm	L out mm	Art. No Eye-Eye	L in mm	L out mm	Art. No Jaw-Eye	L in mm	L out mm	Thread
13.5	42013000	935	1260	42013001	840	1165	42013002	890	1215	Tr 55x8
17	42017000	1010	1360	42017001	920	1270	42017002	965	1315	Tr 65x8
25	42025000	1085	1415	42025001	975	1305	42025002	1030	1360	Tr 70x8
30	42030000	1160	1530	42030001	1020	1390	42030002	1090	1460	Tr 75x8
35	42035000	1250	1650	42035001	1100	1500	42035002	1175	1575	Tr 80x8
45	42045000	1300	1780	42045001	1170	1650	42045002	1235	1715	Tr 90x8
55	42055000	1380	1890	42055001	1270	1780	42055002	1325	1835	Tr 100x8
70	42070000	1480	2025	42070001	1390	1940	42070002	1435	1985	Tr 110x8
85	42085000	1565	2200	42085001	1515	2150	42085002	1540	2175	Tr 120x8
100	42100000	1630	2360	42100001	1600	2330	42100002	1615	2345	Tr 130x8
120	42120000	1745	2340	42120001	1735	2330	42120002	1740	2335	Tr 140x8
160	42160000	1870	2470	42160001	1860	2460	42160002	1865	2465	Tr 160x8
200	42200000	2020	2640	42200001	2000	2620	42200002	2010	2630	Tr 180x8
250	42250000	2170	2840	42250001	2210	2880	42250002	2190	2860	Tr 200x8

WLL ton	K mm	N mm	M mm	L mm	P mm	F mm	H mm	G mm	Weight J-J kg	Weight E-E kg	Weight J-E kg
13.5	55	20	122	51	120	50	120	53	45	36	41
17	65	28	130	63	140	55	140	65	72	55	62
25	76	30	145	70	140	70	140	72	83	60	73
30	80	35	160	72	150	70	150	74	100	68	85
35	90	40	175	80	170	80	170	82	140	96	117
45	100	45	175	90	190	90	190	93	177	117	146
55	110	50	175	100	210	100	210	103	232	156	194
70	110	55	175	108	230	100	230	111	293	200	245
85	130	75	175	127	270	125	270	130	441	270	363
100	140	90	175	140	290	125	290	143	607	364	485
120	155	90	190	152	340	140	340	155	740	490	615
160	170	100	210	178	380	160	380	181	967	614	791
200	190	110	250	190	400	170	400	193	1380	720	1050
250	210	120	280	250	520	190	520	253	1825	832	1345

Tolerance: Forged parts ± 5%, machined parts ± 1 mm

01-08-2012

TUNING FORK

TYPE TF1

Material	:	High tensile steel
Safety factor	:	4 times
Finish	:	Painted
Temperature range	:	-20°C up to +200°C
Standard certification	:	Certificate of Conformity

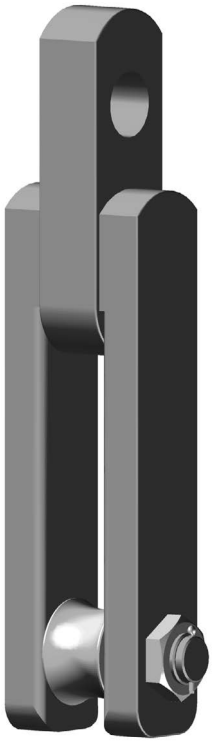

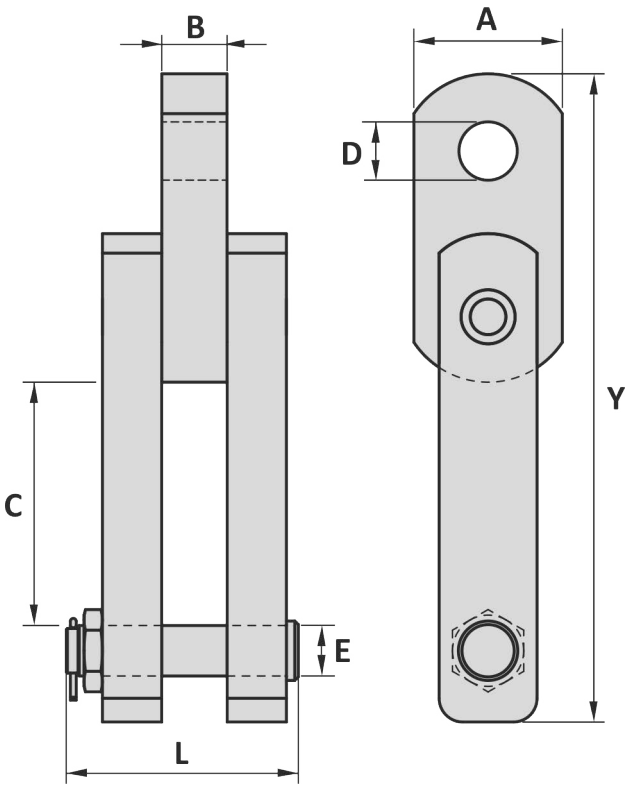

Art. No.	Chain inch	WLL ton	A mm	B mm	C mm	D mm	E mm	L mm	Y mm	Weight kg
46000001	2 ½	55	170	75	280	75	60	255	768	100
46000002	2 ¾	85	210	85	300	85	60	290	863	148
46000003	3	110	240	100	330	98	70	384	927	221
46000004	3 ¼	110	240	100	360	98	70	384	957	237
46000005	3 ½	120	250	110	390	98	85	391	1047	301
46000006	3 ¾	120	250	110	410	98	85	391	1091	315
46000007	4	150	280	120	440	115	90	421	1262	433
46000008	4 ¼	180	320	130	470	130	95	496	1325	543
46000009	4 ½	200	330	140	490	130	100	510	1385	629
46000010	4 ¾	225	350	150	520	145	105	540	1447	714

Tolerance: Forged parts ± 5%, machined parts ± 1 mm

Art. No.	Chain inch	WLL ton	A inch	B inch	C inch	D inch	E inch	L inch	Y inch	Weight lbs
46000001	2 ½	55	6 11/16	2 15/16	11 1/32	2 15/16	2 3/8	10 1/32	30 1/4	220
46000002	2 ¾	85	8 1/4	3 11/32	11 13/16	3 11/32	2 3/8	11 13/32	33 31/32	326
46000003	3	110	9 7/16	3 15/16	13	3 7/8	2 3/4	15 1/8	36 1/2	487
46000004	3 ¼	110	9 7/16	3 15/16	14 3/16	3 7/8	2 3/4	15 1/8	37 11/16	522
46000005	3 ½	120	9 27/32	4 5/16	15 11/32	3 7/8	3 11/32	15 3/8	41 7/32	664
46000006	3 ¾	120	9 27/32	4 5/16	16 1/8	3 7/8	3 11/32	15 3/8	42 15/16	694
46000007	4	150	11 1/32	4 23/32	17 5/16	4 17/32	3 9/16	16 9/16	49 11/16	955
46000008	4 ¼	180	12 19/32	5 1/8	18 1/2	5 1/8	3 3/4	19 17/32	52 5/32	1197
46000009	4 ½	200	13	5 1/2	19 9/32	5 1/8	3 15/16	20 1/16	54 17/32	1387
46000010	4 ¾	225	13 25/32	5 29/32	20 15/32	5 23/32	4 1/8	21 1/4	56 31/32	1574

Tolerance: Forged parts ± 5%, machined parts ± 1/32 inch

03-11-2014

Material : High tensile steel
Safety factor : 5 times
Finish : Painted
Temperature range : -40°C up to +200°C, Polar Rated
Standard certification : Certificate of Conformity
3.1 material certificate EN 10204

Non-standard sizes or custom products available on request

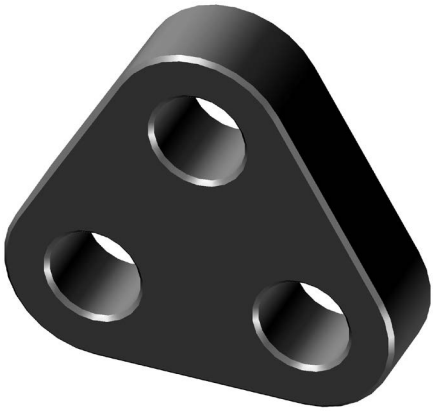

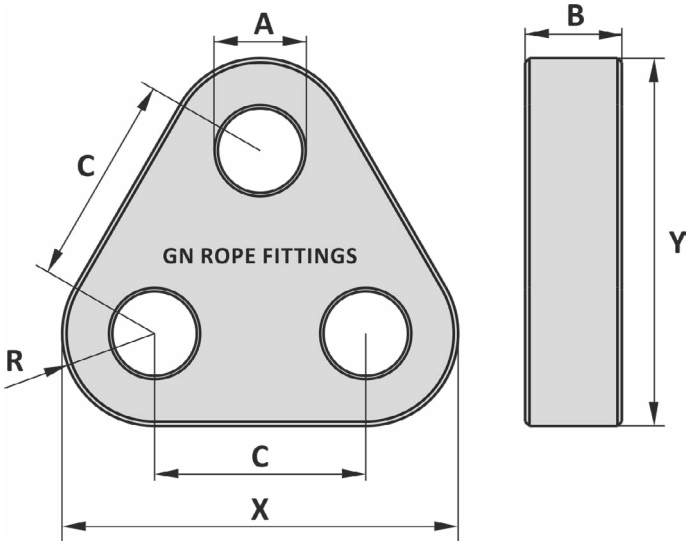

When there is a minimum distance between the triangle plate and the gap required, we advise to use washers.
Spacers on the triangle plate available on request

Art. No.	WLL ton	MBL ton	A mm	B mm	C mm	R mm	X mm	Y mm	Weight kg
75001700	17	85	47	35	120	65	250	234	10
75002500	25	125	55	40	150	80	310	290	18
75003500	35	175	60	50	160	90	340	319	28
75005500	55	275	75	70	210	105	420	392	58
75008500	85	425	90	80	230	135	500	469	96
75012000	120	600	105	100	280	170	620	582	188
75015000	150	750	115	110	320	185	690	647	256
75017500	175	875	115	110	320	195	710	667	274
75020000	200	1000	140	120	390	215	820	768	390
75025000	250	1250	150	140	390	240	870	818	518
75030000	300	1500	160	150	420	250	920	864	617
75040000	400	2000	185	200	490	300	1090	1024	1170
75050000	500	2500	200	200	550	360	1270	1196	1619
75060000	600	3000	220	200	600	400	1400	1320	1972
75070000	700	3500	230	250	600	400	1400	1320	2452

Tolerance: Forged parts ± 5%, machined parts ± 1 mm

Art. No.	WLL ton	MBL ton	A inch	B inch	C inch	R inch	X inch	Y inch	Weight lbs
75001700	17	85	1 27/32	1 3/8	4 23/32	2 9/16	9 27/32	9 7/32	22
75002500	25	125	2 5/32	1 9/16	5 29/32	3 5/32	12 3/16	11 13/32	40
75003500	35	175	2 3/8	1 31/32	6 5/16	3 9/16	13 3/8	12 9/16	62
75005500	55	275	2 15/16	2 3/4	8 1/4	4 1/8	16 17/32	15 7/16	128
75008500	85	425	3 9/16	3 5/32	9 1/16	5 5/16	19 11/16	18 15/32	212
75012000	120	600	4 1/8	3 15/16	11 1/32	6 11/16	24 13/32	22 29/32	414
75015000	150	750	4 17/32	4 5/16	12 19/32	7 9/32	27 5/32	25 15/32	564
75017500	175	875	4 17/32	4 5/16	12 19/32	7 11/16	27 15/16	26 1/4	604
75020000	200	1000	5 1/2	4 23/32	15 11/32	8 15/32	32 9/32	30 1/4	860
75025000	250	1250	5 29/32	5 1/2	15 11/32	9 7/16	34 1/4	32 3/16	1142
75030000	300	1500	6 5/16	5 29/32	16 17/32	9 27/32	36 7/32	34	1360
75040000	400	2000	7 9/32	7 7/8	19 9/32	11 13/16	42 29/32	40 5/16	2579
75050000	500	2500	7 7/8	7 7/8	21 21/32	14 3/16	50	47 3/32	3569
75060000	600	3000	8 21/32	7 7/8	23 5/8	15 3/4	55 1/8	51 31/32	4348
75070000	700	3500	9 1/16	9 27/32	23 5/8	15 3/4	55 1/8	51 31/32	5406

Tolerance: Forged parts ± 5%, machined parts ± 1/32 inch

27-07-2015

WIRE ROPE CLIP

TYPE WC1

Material	:	High tensile steel
Standards	:	Generally according to US Federal Spec FF-C-450
Finish	:	Galvanized
Temperature range	:	-20°C up to +200°C
Standard certification	:	Certificate of Conformity

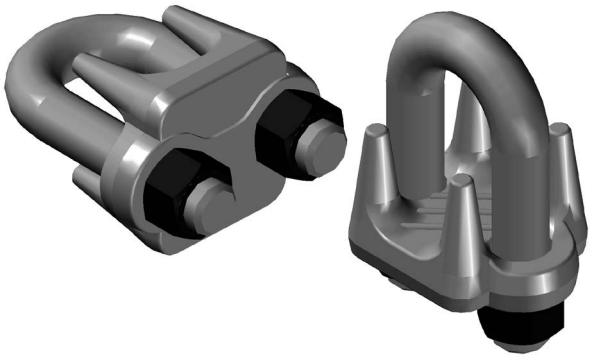

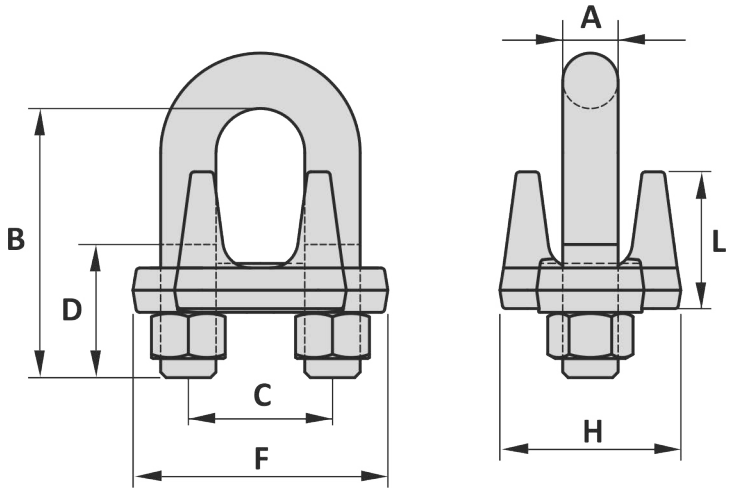

Art. No.	Rope size inch	Rope size mm	A mm	B mm	C mm	D mm	F mm	H mm	L mm	Weight kg
49004509	1 ¾	44 - 46	29	146	78	70	134	97	74	4.2
49005009	2	48 - 52	32	164	86	76	149	113	83	6.5
49005709	2 ¼	56 - 58	32	181	98	81	162	114	81	7.3
49006409	2 ½	62 - 65	32	195	105	87	168	103	94	8.6
49007009	2 ¾	68 - 72	32	211	111	90	175	127	124	10
49007609	3	75 - 78	38	233	121	99	194	149	119	15
49008909	3 ½	85 - 90	38	273	140	114	213	157	152	19

Tolerance: ± 5%

Art. No.	Rope size inch	Rope size mm	A inch	B inch	C inch	D inch	F inch	H inch	L inch	Weight lbs
49004509	1 ¾	44 - 46	1 ⅛	5 ¾	3 1/16	2 ¾	5 9/32	3 13/16	2 29/32	9.3
49005009	2	48 - 52	1 ¼	6 7/16	3 ⅜	3	5 ⅞	4 7/16	3 ¼	14
49005709	2 ¼	56 - 58	1 ¼	7 ⅛	3 ⅞	3 3/16	6 ⅜	4 ½	3 3/16	16
49006409	2 ½	62 - 65	1 ¼	7 11/16	4 ⅛	3 7/16	6 ⅝	4 1/16	3 11/16	19
49007009	2 ¾	68 - 72	1 ¼	8 5/16	4 ⅜	3 7/16	6 ⅞	5	4 ⅞	22
49007609	3	75 - 78	1 ½	9 3/16	4 ¾	3 29/32	7 ⅝	5 ⅞	4 11/16	33
49008909	3 ½	85 - 90	1 ½	10 ¾	5 ½	4 ½	8 ⅜	6 3/16	6	42

Tolerance: ± 5%

01-07-2014

NOTES